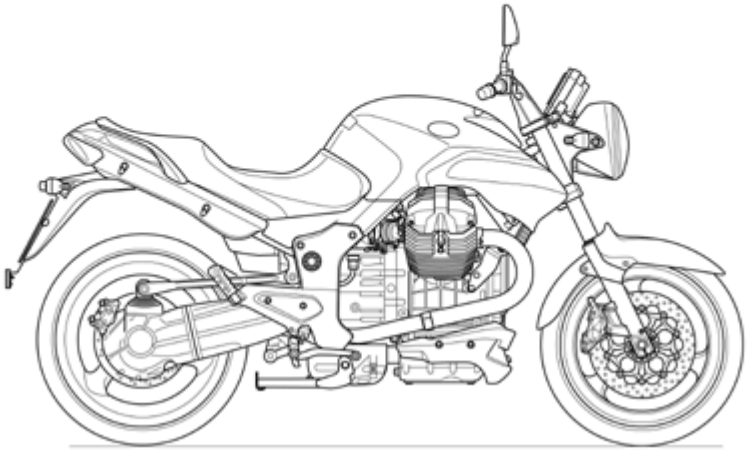

BREVA V IE 1100 2005-2007	GU077	02	TAB N.	01
FRAME				

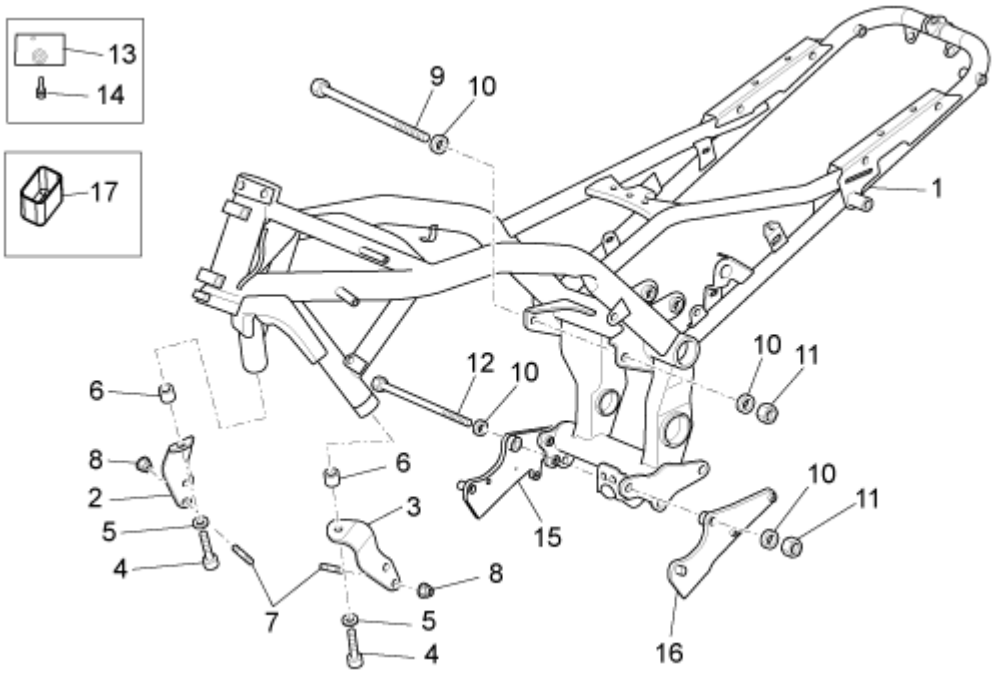

Pos.	Description	Year	I_M_	Country	Version		Code	Q.ty	P.Cod.
1	Frame	-	-	-	-	-	977700	1	BA009
2	RH plate	-	-	-	-	-	GU05421430	1	BA19A
3	LH plate	-	-	-	-	-	GU05421530	1	BA19B
4	Hex socket screw M12x50	-	-	-	-	-	GU98682650	2	-
5	Washer 13x18x1,7	-	-	-	-	-	GU30217900	2	-
6	Spacer 12x35x14	-	-	-	-	-	GU91181215	2	-
7	Stud bolt M10x35	-	-	-	-	-	GU96510036	4	-
8	Self-locking nut M10*	-	-	-	-	-	AP8152301	4	-
9	Pin M12	-	-	-	-	-	AP8221307	1	BA329
10	Washer 13x24x2,5	-	-	-	-	-	GU95008313	4	-
11	Low self-locking nut M12*	-	-	-	-	-	AP8150432	2	-
12	Pin M12x270	-	-	-	-	-	AP8221227	1	BA329
13	Support plate	-	-	CA	-	-	977788	1	-
14	Special screw M8x15	-	-	CA	-	-	GU97260415	1	-
15	RH plate	7	-	-	-	-	977806	1	BG079
16	LH plate	7	-	-	-	-	977805	1	BG079
17	Cap	7	-	-	-	-	978093	2	BG079

Revente Interdite - Revendita Vietata - Resaling Forbiden - Wiederverkauf Verboten

BREVA V IE 1100 2005-2007	GU077	02	TAB N.	02
STANDS				

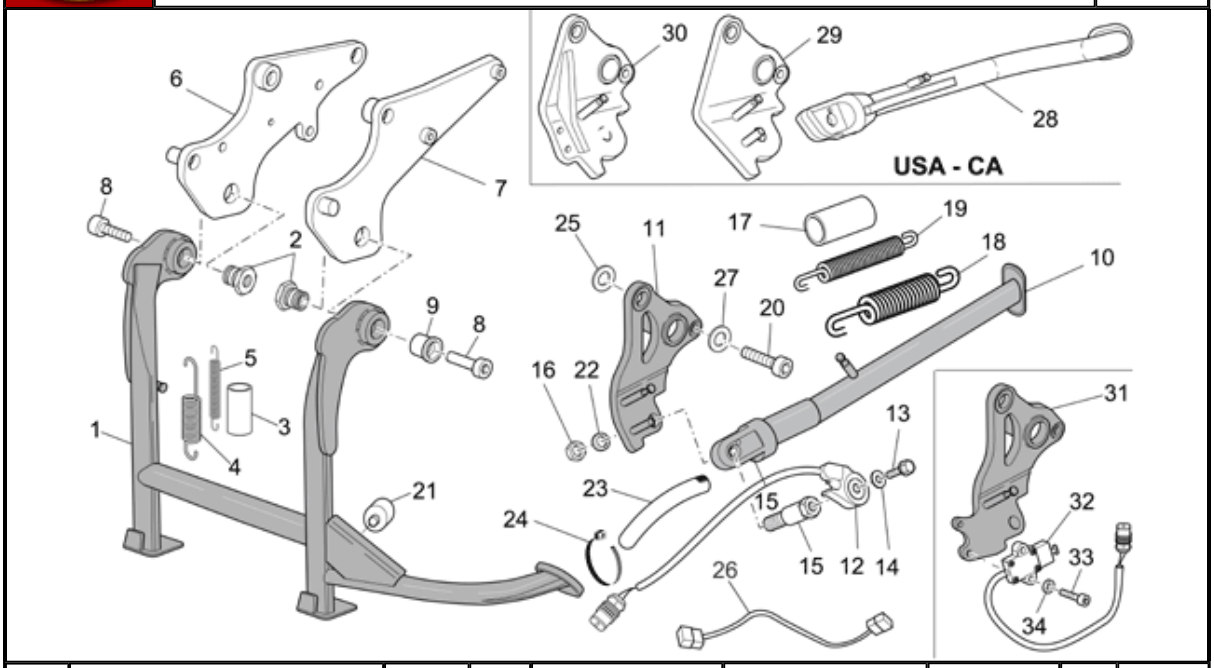

Pos.	Description	Year	I_M_	Country	Version		Code	Q.ty	P.Cod.
1	Central stand	5-6	-	-	-	-	GU05430330	1	BG009
2	Support	5-6	-	-	-	-	AP8121467	2	BG019
3	Stand spring protection	5-6	-	-	-	-	AP8178918	1	-
4	Lateral stand spring	5-6	-	-	-	-	AP8221317	1	BG02K
5	Internal lateral stand spring	5-6	-	-	-	-	AP8221318	1	BG02J
6	RH plate	5-6	-	-	-	-	GU05432930	1	BG079
7	LH plate	5-6	-	-	-	-	GU05433430	1	BG079
8	Hex socket screw M10x30	5-6	-	-	-	-	GU98682530	2	-
9	Bush	5-6	-	-	-	-	GU05429630	2	-
10	Lateral stand	-	-	AUS-EU-J-UK	V2	-	977079	1	BG049
	Lateral stand	-	-	AUS-EU-J-UK	V1	-	GU05432130	1	BG049
11	Stand plate	-	-	AUS-EU-J-UK	V1	-	GU05433630	1	BG119
12	Rotary switch	-	-	-	-	-	AP8127319	1	CD149
13	Screw w/ flange M6x20	-	-	-	-	-	AP8152279	1	-
14	Washer 6,6x18x1,6*	-	-	-	-	-	AP8150015	1	-
15	Central stand fixing screw	-	-	-	-	-	AP8121994	1	BG019
16	Low nut M10x1,25*	-	-	-	-	-	AP8152001	1	-
17	Stand spring protection	-	-	-	-	-	AP8102524	1	-
18	Lateral stand spring	-	-	-	-	-	AP8221204	1	BG02K
19	Internal lateral stand spring	-	-	-	-	-	AP8221211	1	BG02J
20	Hex socket screw M12x35	-	-	-	-	-	GU98231235	2	-
21	Stand end stop	-	-	-	-	-	AP8144030	1	BG039
22	Curved spring washer *	-	-	-	-	-	AP8150292	1	-
23	Thermal sheath	-	-	-	-	-	GU00823923140	1	-
24	Hose clamp 3,6x20,6	-	-	-	-	-	GU14609650	2	-
25	Washer 13x24x2,5	-	-	-	-	-	GU95008313	2	-
26	Adapter cable	5-6	-	-	std-V2	-	977292	1	-
	Adapter cable	5-6	-	-	abs-V1	-	977571	1	-
27	Washer 13x18x1,7	-	-	-	-	-	GU30217900	2	-
28	Lateral stand	-	-	CA-USA	V2	-	977093	1	BG049
	Lateral stand	-	-	CA-USA	V1	-	GU05432131	1	BG049
29	Stand plate	-	-	CA-USA	V1	-	GU05433631	1	BG119
30	Stand plate	-	-	CA-USA	V2	-	977408	1	BG119
31	Stand plate	-	-	AUS-EU-J-UK	V2	-	977080	1	BG119
32	Lateral stand switch	-	-	-	-	-	639542	1	CD149
33	Hex socket screw M5x16	-	-	-	-	-	GU98612216	2	-
34	Washer 5,3x8,9x2,4	-	-	-	-	-	GU95020105	2	-

Revente Interdite - Revendita Vietata - Resaling Forbiden - Wiederverkauf Verboten

BREVA V IE 1100 2005-2007	GU077	02	TAB N.	03
FOOT RESTS I				

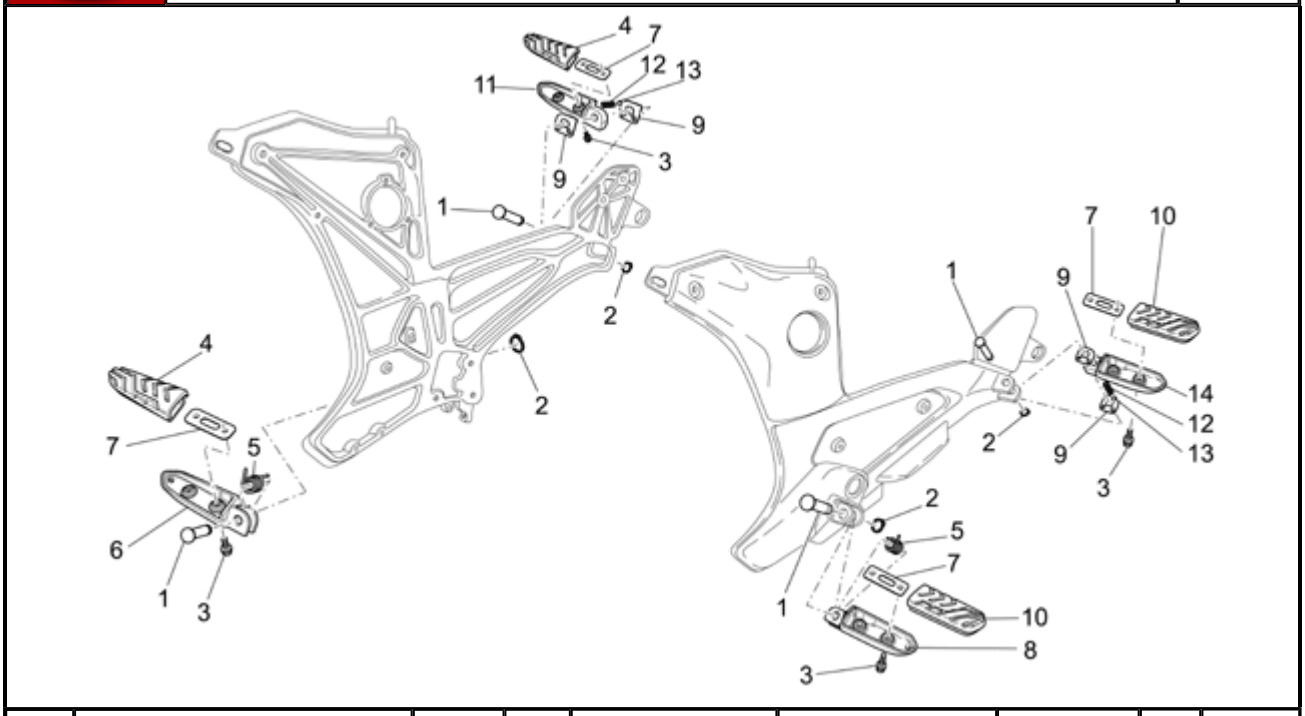

Pos.	Description	Year	I_M_	Country	Version		Code	Q.ty	P.Cod.
1	Pin	-	-	-	-	-	AP8121567	4	-
2	Stop ring	-	-	-	-	-	AP8152409	4	-
3	Screw w/ flange M6x12*	-	-	-	-	-	AP8152277	8	-
4	Support rubber part	-	-	-	-	-	GU32443210	2	BA24A
5	Footrest return spring	-	-	-	-	-	AP8221277	2	BA08*
6	RH Foot rests	-	-	-	-	-	AP8145034	1	BA05A
7	Plate	-	-	-	-	-	GU32441210	4	-
8	LH Foot rests	-	-	-	-	-	AP8145035	1	BA05B
9	Footrest plate	-	-	-	-	-	AP8134451	4	-
10	Support rubber part	-	-	-	-	-	GU32443211	2	BA24B
11	Rear footrest, RH	-	-	-	-	-	GU32442310	1	BA15A
12	Coil compress. spring *	-	-	-	-	-	AP8121133	2	-
13	Ball D6,35	-	-	-	-	-	AP8101861	2	-
14	Rear footrest, LH	-	-	-	-	-	GU32442710	1	BA15B

BREVA V IE 1100 2005-2007	GU077	02	TAB N.	04
FOOT RESTS II				

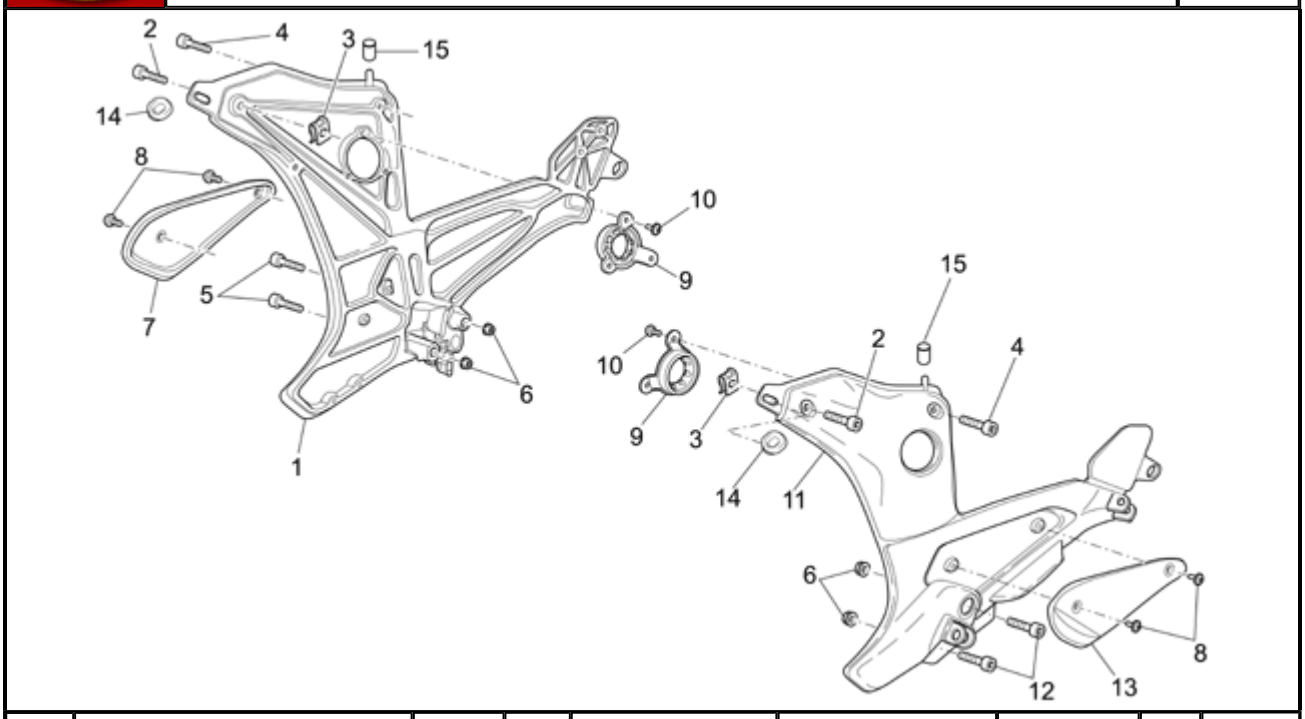

Pos.	Description	Year	I_M_	Country	Version	Code	Q.ty	P.Cod.
1	RH plate	-	-	-	- -	GU05443530	1	BA17A
2	Hex socket screw M8x30	-	-	-	- -	GU98692430	2	-
3	Nut with clip M8x1,25	-	-	-	- -	GU01576530	2	-
4	Hex socket screw M8x25	-	-	-	- -	GU98692425	2	-
5	Hex socket screw M8x40	-	-	-	- -	GU98680440	2	-
6	Self-locking nut M8*	-	-	-	- -	AP8152300	4	-
7	RH protection	-	-	-	- -	GU05446930	1	DC269
8	Screw w/ flange M5x9	-	-	-	- -	AP8152339	4	-
9	Ring	-	-	-	- -	GU05446431	2	-
10	Hex socket screw M5X10	-	-	-	- -	GU98350210	6	-
11	LH plate	-	-	-	- -	GU05446030	1	BA17B
12	Hex socket screw M8x55	-	-	-	- -	AP8150046	2	-
13	LH protection	-	-	-	- -	GU05447430	1	DC269
14	Rubber spacer	-	-	-	- -	AP8220162	4	-
15	Rubber spacer	-	-	-	- -	AP8220526	2	-

BREVA V IE 1100 2005-2007	GU077	02	TAB N.	05
GEAR LEVER				

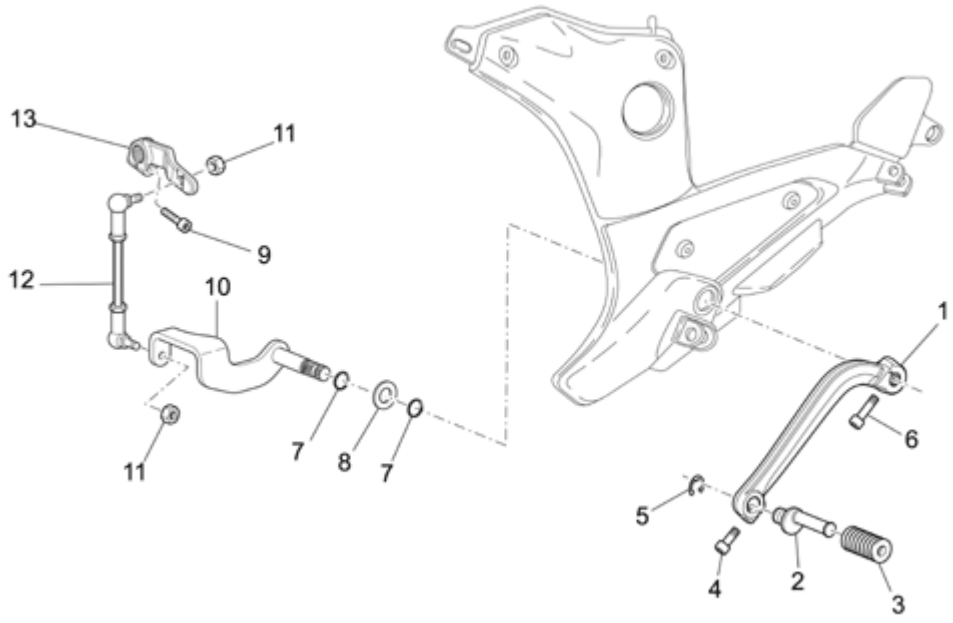

Pos.	Description	Year	I_M_	Country	Version	Code	Q.ty	P.Cod.
1	Gear lever	-	-	-	- -	GU05251130	1	BA109
2	Brake lever pin	-	-	-	- -	AP8121221	1	-
3	Lever rubber	-	-	-	- -	AP8120912	1	BA149
4	Hex socket screw M6x16	-	-	-	- -	GU98682316	1	-
5	Circlip d9	-	-	-	- -	AP8150462	1	-
6	Hex socket screw M6x20	-	-	-	- -	GU98682320	1	-
7	O-ring 11,11x1,78	-	-	-	- -	AP8144007	2	-
8	Washer 12,2X20X2	-	-	-	- -	GU95008213	1	-
9	Hex socket screw M6x20	-	-	-	- -	GU98682320	1	-
10	Lever	-	-	-	- -	GU05258230	1	BA119
12	Change gear tie rod compl.	-	-	-	- -	GU05257830	1	BA129
13	Lever	-	-	-	- -	GU05256930	1	BA119

BREVA V IE 1100 2005-2007	GU077	02	TAB N.	06
STEERING				

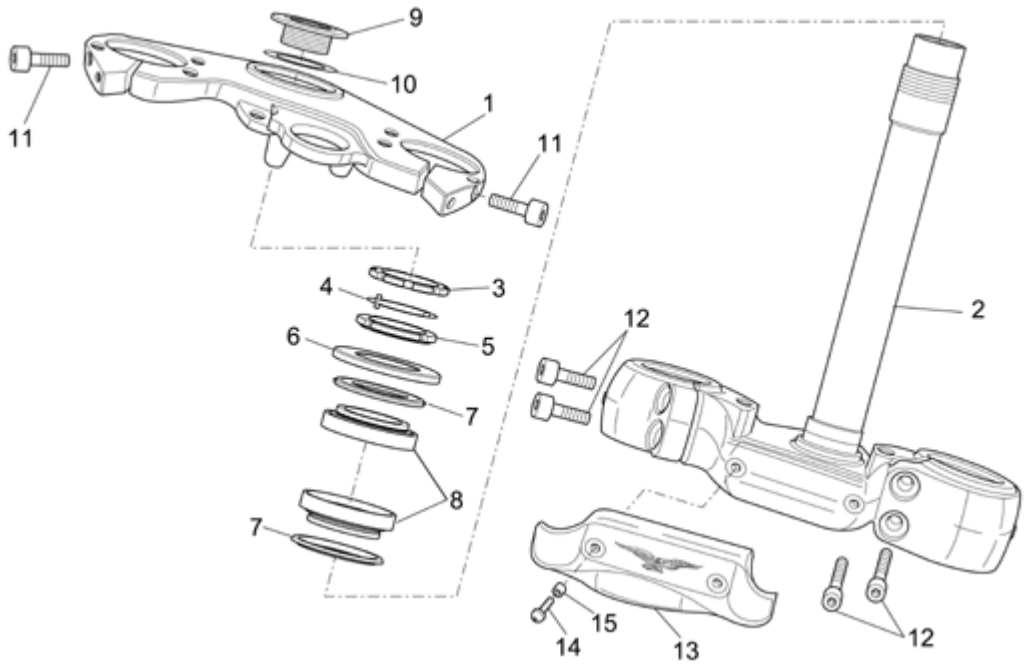

Pos.	Description	Year	I_M_	Country	Version	Code	Q.ty	P.Cod.
1	Fork upper plate	-	-	-	- -	GU05493130	1	BD119
2	Stem base	-	-	-	- -	GU05494030	1	BD019
3	Return ring nut	-	-	-	- -	AP8123643	1	BA049
4	Steering security plate	-	-	-	- -	AP8121207	1	-
5	Ring nut	-	-	-	- -	AP8123642	1	BA049
6	Dust cover ring	-	-	-	- -	AP8123644	1	-
7	Dust cover ring	-	-	-	- -	AP8123641	2	-
8	Axial ball bearing	-	-	-	- -	AP8110077	2	BA039
9	Upper plate fixing bush	-	-	-	- -	AP8121205	1	-
10	Stem plug washer	-	-	-	- -	AP8152384	1	-
11	Hex socket screw M8x30	-	-	-	- -	GU98682430	2	-
12	Hex socket screw M8x25	-	-	-	- -	GU98682425	4	-
13	Brake hose fixing plate	-	-	-	- -	GU05658431	1	BD329
14	Screw w/ flange M5x16	-	-	-	- -	AP8152298	2	-
15	Bush 5,3x8x7,1	-	-	-	- -	AP8221036	2	-

Revente Interdite - Revendita Vietata - Resaling Forbiden - Wiederverkauf Verboten

BREVA V IE 1100 2005-2007	GU077	02	TAB N.	07
FRONT FORK				

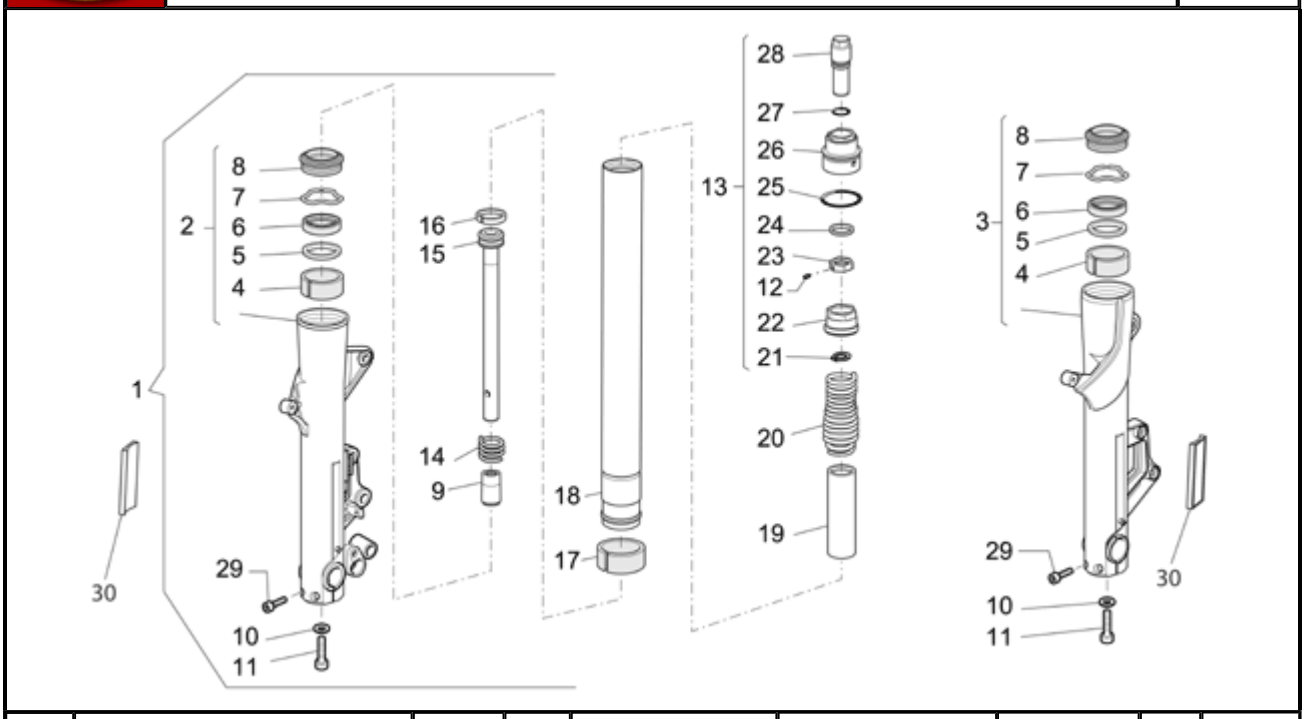

Pos.	Description	Year	I_M_	Country	Version		Code	Q.ty	P.Cod.
1	Front fork "Marzocchi"	-	-	-	-	-	GU05490230	1	BD009
2	RH sleeve	-	-	-	-	-	GU05490630	1	BD03A
3	LH sleeve	-	-	-	-	-	GU05490730	1	BD03B
4	Upper bush	-	-	-	-	-	GU03530528	2	BD10*
5	Cup	-	-	-	-	-	GU03530527	2	-
6	Gasket ring	-	-	-	-	-	GU03530526	2	BD04*
7	Stop ring	-	-	-	-	-	GU03530525	2	-
8	Dust cover	-	-	-	-	-	GU03530524	2	BD05*
9	Drift	-	-	-	-	-	GU03530551	2	BD08*
10	Washer 14x10,5x1,5	-	-	-	-	-	GU05530535	2	-
11	Hex socket screw M10x35	-	-	-	-	-	GU98682535	2	-
12	Dowel	-	-	-	-	-	GU01530501	2	-
13	Plug cpl.	-	-	-	-	-	GU05504530	2	BD15*
14	Return spring	-	-	-	-	-	GU03530553	2	BD07*
15	Plunger, complete	-	-	-	-	-	GU05530530	2	BD259
16	Ring	-	-	-	-	-	GU03530550	2	-
17	Lower bush	-	-	-	-	-	GU03530510	2	BD10*
18	Sleeve	-	-	-	-	-	GU05525430	2	BD13*
19	Preload tube	-	-	-	-	-	GU05530531	2	-
20	Spring	-	-	-	-	-	GU05526630	2	BD07*
21	Stop ring	-	-	-	-	-	GU90271016	2	-
22	Bush	-	-	-	-	-	GU05530532	2	-
23	Nut	-	-	-	-	-	GU05530533	2	-
24	Fifth wheel	-	-	-	-	-	GU01530503	2	-
25	O-ring	-	-	-	-	-	GU05530536	2	-
26	Body	-	-	-	-	-	0000000	2	-
27	O-ring	-	-	-	-	-	GU01530509	2	-
28	Adjusting pin	-	-	-	-	-	GU05530534	2	-
29	Hex socket screw M6X40	-	-	-	-	-	GU98680340	4	-
30	Reflector, amber	-	-	CA-USA	-	-	GU05781630	2	CB08E

BREVA V IE 1100 2005-2007	GU077	02	TAB N.	08
SWING ARM				

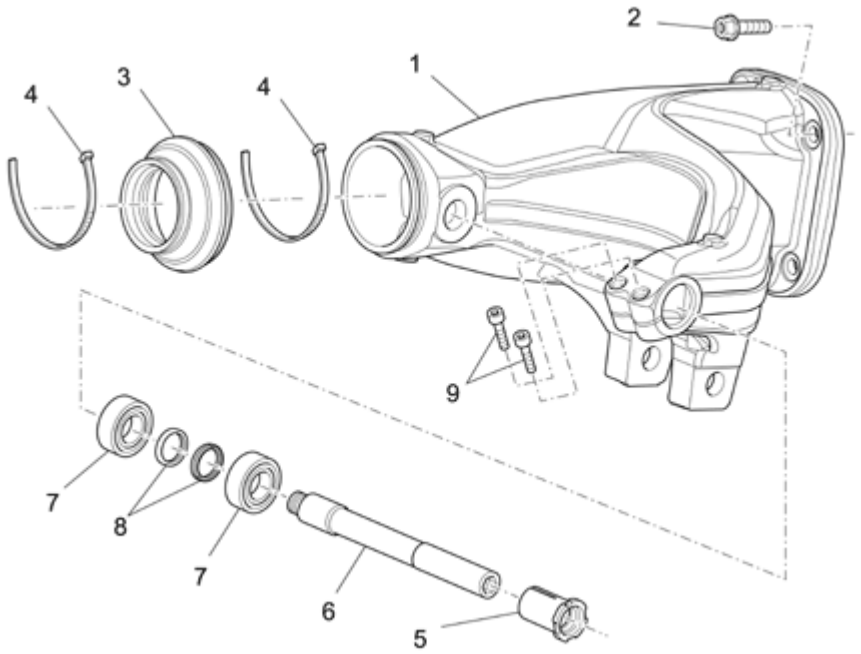

Pos.	Description	Year	I_M_	Country	Version	Code	Q.ty	P.Cod.
1	Swingarm	-	-	-	- -	GU05540230	1	BE009
2	Screw w/ flange M10x35	-	-	-	- -	AP8152318	4	-
3	Rubber bellows	-	-	-	- -	GU05548030	1	AH289
4	Hose clamp 3,6x375	-	-	-	- -	GU93304390	2	-
5	Bush	-	-	-	- -	GU05547130	1	BE079
6	Pin	-	-	-	- -	GU05547030	1	BE019
7	Roller bearing 25x47x17	-	-	-	- -	GU92249224	2	BE069
8	Gasket ring	-	-	-	- -	GU05547930	2	-
9	Hex socket screw M6x25	-	-	-	- -	GU98682325	2	-

BREVA V IE 1100 2005-2007	GU077	02	TAB N.	09
TRANSMISSION COMPLETE				

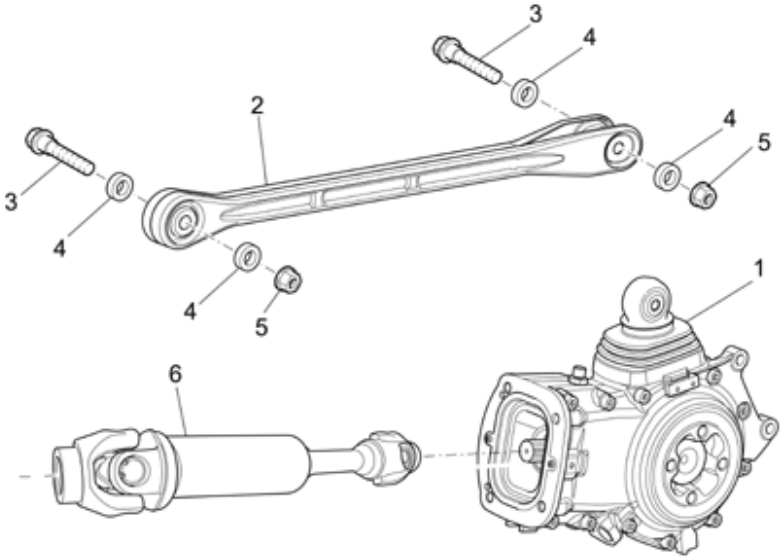

Pos.	Description	Year	I_M_	Country	Version	Code	Q.ty	P.Cod.
1	Transmission assygrey	-	-	-	- -	GU400122400100	1	AG219
2	Reaction rod assy.	-	-	-	- -	GU05358830	1	AG239
3	Screw w/ flange M10x55	-	-	-	- -	AP8152410	2	AG379
4	Spacer 10,2x20x4	-	-	-	- -	AP8121218	4	-
5	Nut M10	-	-	-	- -	AP8152242	2	-
6	Drive shaft	-	-	-	- -	GU05326330	1	AG199

BREVA V IE 1100 2005-2007	GU077	02	TAB N.	10
TRANS.CPL.-CAGE				

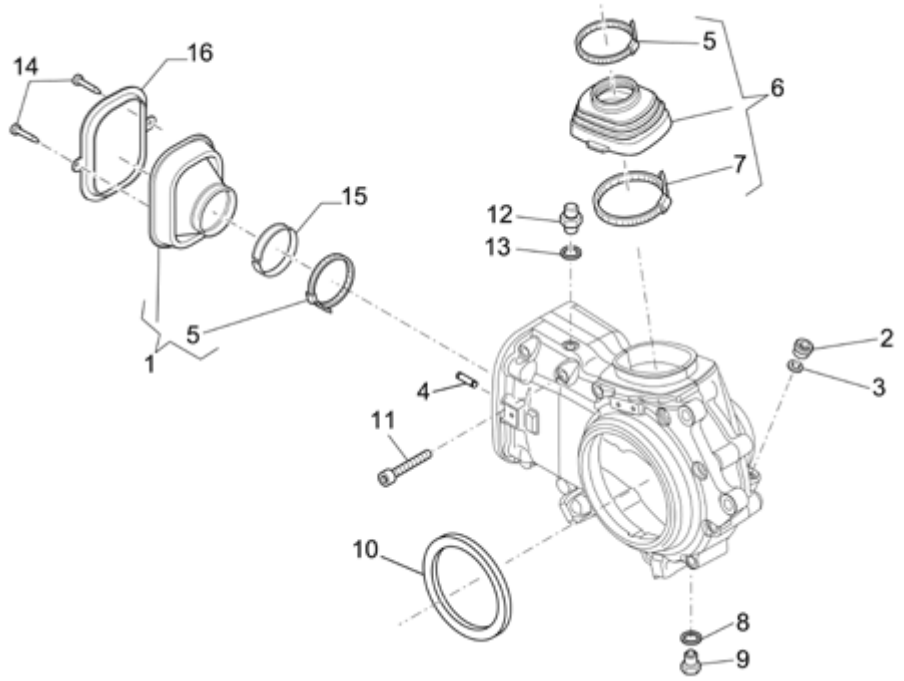

Pos.	Description	Year	I_M_	Country	Version	Code	Q.ty	P.Cod.
1	Upper dust cover	-	-	-	- -	GU05358330	1	AG399
2	Oil plug M12x1,5	-	-	-	- -	GU05351230	1	-
3	Washer	-	-	-	- -	GU90718120	1	-
4	Pin 6x20	-	-	-	- -	GU95510620	2	-
5	Hose clamp	-	-	-	- -	GU05358130	2	-
6	Upper dust cover	-	-	-	- -	GU05358030	1	AG399
7	Hose clamp	-	-	-	- -	GU05358230	1	-
8	Gasket 10x18x1,5	-	-	-	- -	GU01528930	1	-
9	Oil unload plug M10X1	-	-	-	- -	GU31003766	1	-
10	Gasket ring 85x110x8BASL	-	-	-	- -	GU90408511	1	AO369
11	Hex socket screw M8x50	-	-	-	- -	GU98680450	11	-
12	Breather plug	-	-	-	- -	GU05206530	1	-
13	Gasket 10x18x1,5	-	-	-	- -	GU01528930	1	-
14	Screw M3,9x6,5	-	-	-	- -	GU99210406	2	-
15	Ring	-	-	-	- -	GU05358530	1	-
16	Gasket	-	-	-	- -	GU05358630	1	-

BREVA V IE 1100 2005-2007	GU077	02	TAB N.	11
TRANS.CPL.-BEVEL GEAR				

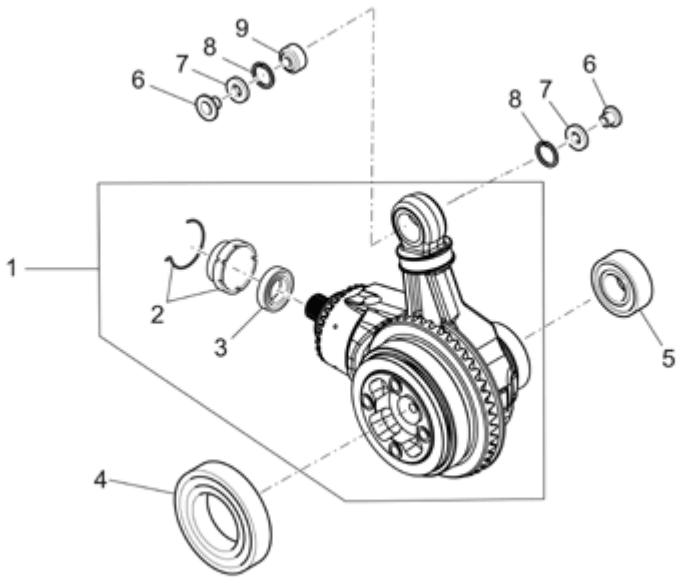

Pos.	Description	Year	I_M_	Country	Version	Code	Q.ty	P.Cod.
1	Bevel gear kit 12/44	-	-	-	- -	GU05354230	1	AG189
2	Ring nut	-	-	-	- -	GU05352430	1	-
3	Gasket ring 45x58x7	-	-	-	- -	GU90404558	1	AO389
4	Ball bearing 85x120x18	-	-	-	- -	GU92208518	1	AI269
5	Ball bearing 30x62x16	-	-	-	- -	GU92204230	1	AI269
6	Bush	-	-	-	- -	AP8121098	2	AG379
7	Gasket ring	-	-	-	- -	AP8120485	2	AG379
8	Circlip	-	-	-	- -	GU90273026	2	AG379
9	Ball joint	-	-	-	- -	GU05638130	1	AG379

BREVA V IE 1100 2005-2007	GU077	02	TAB N.	12
CONNECTING ROD - REAR SHOCK ABS.				

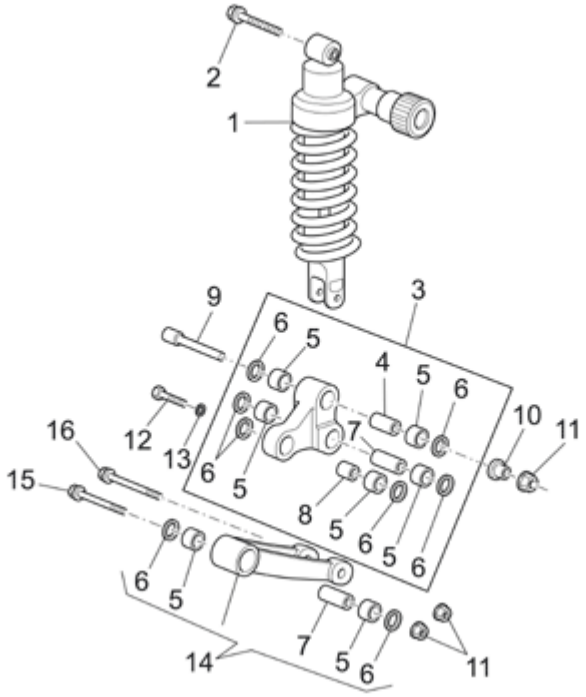

Pos.	Description	Year	I_M_	Country	Version	Code	Q.ty	P.Cod.
1	Shock absorber	-	-	-	- -	GU05550230	1	BF009
2	Screw w/ flange M10x80	-	-	-	- -	AP8152398	1	-
3	Double conrod	-	-	-	- -	GU05560330	1	BF099
4	Double connecting rod pin L40	-	-	-	- -	AP8135924	1	BF109
5	Needle bearing	-	-	-	- -	AP8110066	7	BF119
6	Oil seal D18x24x3	-	-	-	- -	AP8110068	8	-
7	Double connecting rod pin L47	-	-	-	- -	GU05562030	2	BF109
8	Double connecting rod pin L25	-	-	-	- -	AP8135608	1	BF109
9	Hex socket screw M10x82	-	-	-	- -	AP8152397	1	-
10	T bush *	-	-	-	- -	AP8121155	1	-
11	Self-locking nut M10*	-	-	-	- -	AP8152301	3	-
12	Hex screw M10x47	-	-	-	- -	AP8152147	1	BF029
13	Curved spring washer *	-	-	-	- -	AP8150292	1	-
14	Single conrod comp.	-	-	-	- -	GU05562430	1	BF089
15	Screw w/ flange M10x85	-	-	-	- -	AP8152482	1	-
16	Screw w/ flange M10x95	-	-	-	- -	AP8152396	1	-

BREVA V IE 1100 2005-2007	GU077	02	TAB N.	13
FUEL TANK				

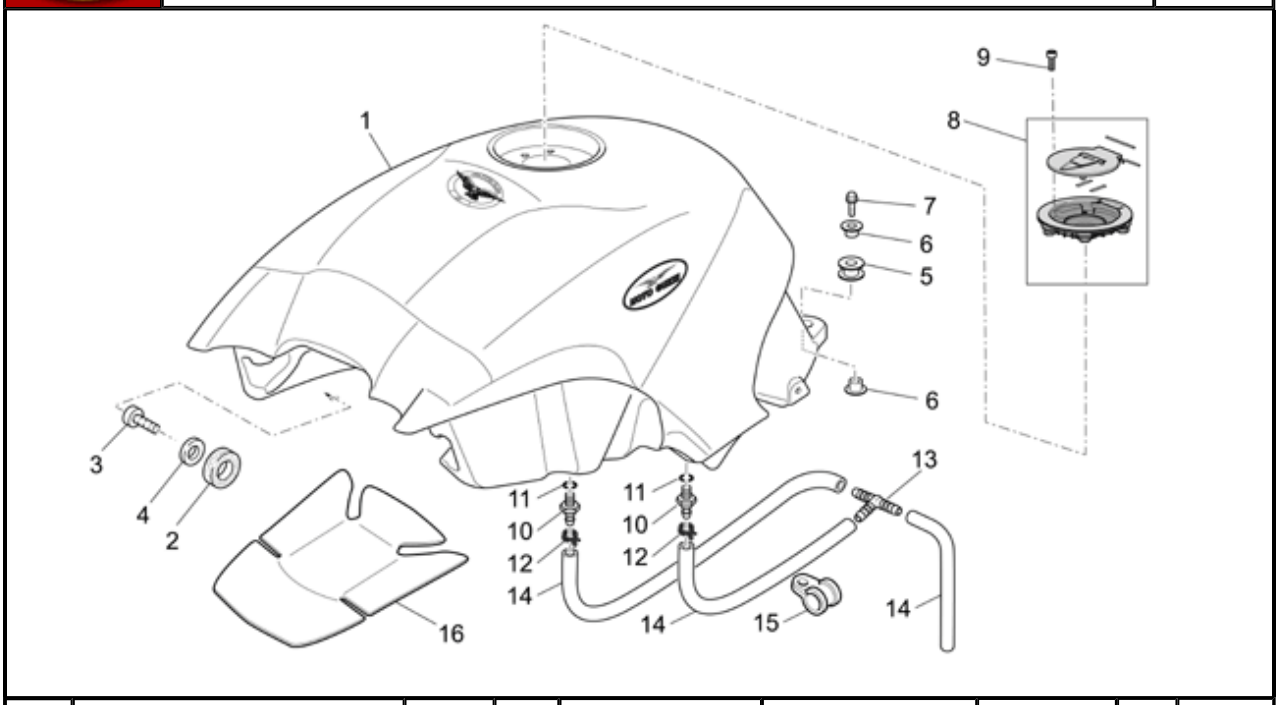

Pos.	Description	Year	I_M_	Country	Version		Code	Q.ty	P.Cod.
1	Fuel tank orange	-	-	CA-USA	-	or	977558	1	DA009
	Fuel tank blank	-	-	AUS-EU-J-UK	-	gr	GU05100230	1	DA009
	Fuel tank, white	-	-	AUS-EU-J-UK	-	d/wh	GU05100230BM	1	DA009
	Fuel tank red	-	-	AUS-EU-J-UK	-	r/re	GU05100231	1	DA009
	Fuel tank, black	-	-	AUS-EU-J-UK	-	g/bl	GU05100232	1	DA009
	Fuel tank, grey	-	-	AUS-EU-J-UK	-	s/gr	GU05100233	1	DA009
	Fuel tank blank	-	-	CA-USA	-	gr	GU05100235	1	DA009
	Fuel tank, white	-	-	CA-USA	-	d/wh	GU05100235BM	1	DA009
	Fuel tank red	-	-	CA-USA	-	r/re	GU05100236	1	DA009
	Fuel tank, black	-	-	CA-USA	-	g/bl	GU05100237	1	DA009
	Fuel tank, grey	-	-	CA-USA	-	s/gr	GU05100238	1	DA009
	Fuel tank orange	-	-	AUS-EU-J-UK	-	or	977557	1	DA009
2	Rubber spacer *	-	-	-	-	-	AP8201124	2	-
3	Hex socket screw M8X14	-	-	-	-	-	GU98682414	2	-
4	Washer 8,4X15X1,5	-	-	-	-	-	GU95008208	2	-
5	Rubber spacer	-	-	-	-	-	GU02107100	1	-
6	Spacer *	-	-	-	-	-	AP8121804	2	-
7	Screw w/ flange M8x45*	-	-	-	-	-	AP8152291	1	-
8	Tank cap	-	-	-	-	-	GU05103930	1	DA029
9	Hex socket screw M5x16	-	-	-	-	-	GU98692216	4	-
10	Union	-	-	-	-	-	GU30103730	2	DA409
11	O-ring 2018	-	-	-	-	-	AP8120965	2	-
12	Hose clamp D10,1*	-	-	-	-	-	AP8101595	2	-
13	3-way union	-	-	-	-	-	AP8104666	1	-
14	Fuel pipe 5,5x10	-	-	-	-	-	AP8120952	3	DA399
15	Cable-guide	-	-	-	-	-	AP8104451	2	-
16	Fuel tank central insulation	-	-	-	-	-	GU05102930	1	DA349

BREVA V IE 1100 2005-2007	GU077	02	TAB N.	14
FRONT BODY - DUCT				

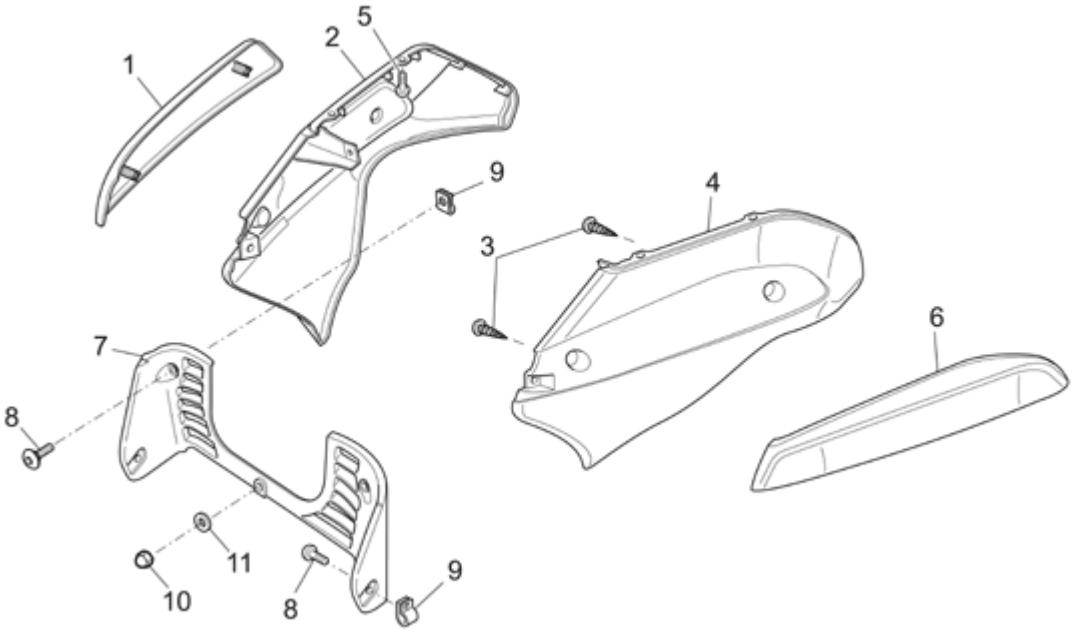

Pos.	Description	Year	I_M_	Country	Version		Code	Q.ty	P.Cod.
1	RH protection	-	-	-	-	-	GU05576631	1	DC27A
2	RH lat.fairing technogrey	-	-	-	-	-	GU05576231	1	DC02A
	RH lateral fairing, blank	-	-	-	-	gr	GU05576230	1	DC02A
3	Self-tap screw 3,9x14	-	-	-	-	-	AP8150413	4	-
4	LH lat.fairing technogrey	-	-	-	-	-	GU05576331	1	DC02B
	LH lateral fairing, blank	-	-	-	-	gr	GU05576330	1	DC02B
5	Screw w/ flange M5x9	-	-	-	-	-	AP8152339	6	-
6	LH protection	-	-	-	-	-	GU05576731	1	DC27B
7	Water cooler grille	-	-	-	-	-	GU05476430	1	DC499
8	Screw w/ flange M5x12	-	-	-	-	-	AP8152302	4	-
9	Clip M5	-	-	-	-	-	AP8102375	4	-
10	Cap nut M5x0,8	-	-	-	-	-	GU92787205	1	-
11	Washer 5,2x18x1,5	-	-	-	-	-	GU95005304	1	-

BREVA V IE 1100 2005-2007	GU077	02	TAB N.	15
FRONT MUD.-PILLAR				

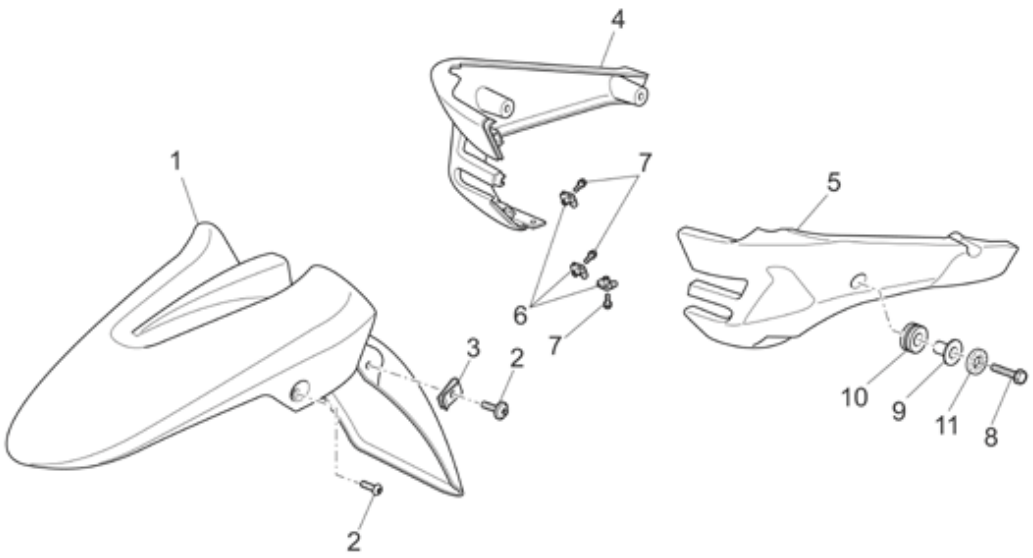

Pos.	Description	Year	I_M_	Country	Version	Code	Q.ty	P.Cod.
1	Front mudguard blank	-	-	-	- gr	GU05434330	1	DC169
	Front mudguard, white	-	-	-	- d/wh	GU05434330BM	1	DC169
	Front mudguard, red	-	-	-	- r/re	GU05434331	1	DC169
	Front mudguard, black	-	-	-	- g/bl	GU05434332	1	DC169
	Front mudguard, grey	-	-	-	- s/gr	GU05434333	1	DC169
	Front mudguard, orange	-	-	-	- or	977556	1	DC169
2	Screw w/ flange M5x12	-	-	-	- -	AP8152302	4	-
3	Clip M5	-	-	-	- -	AP8102375	2	-
4	RH Pillar	-	-	-	- -	GU05570530	1	DC079
5	LH Pillar	-	-	-	- -	GU05570630	1	DC079
6	Clip M5	-	-	-	- -	AP8102375	3	-
7	Screw w/ flange M5x9	-	-	-	- -	AP8152339	3	-
8	Screw w/ flange M8x25*	-	-	-	- -	AP8152287	4	-
9	T bush 8,5x10,7x12	-	-	-	- -	AP8221128	4	-
10	Rubber spacer	-	-	-	- -	AP8120594	4	-
11	Washer	-	-	-	- -	GU95008308	4	-

BREVA V IE 1100 2005-2007	GU077	02	TAB N.	16
SADDLE-CENTRAL BOD				

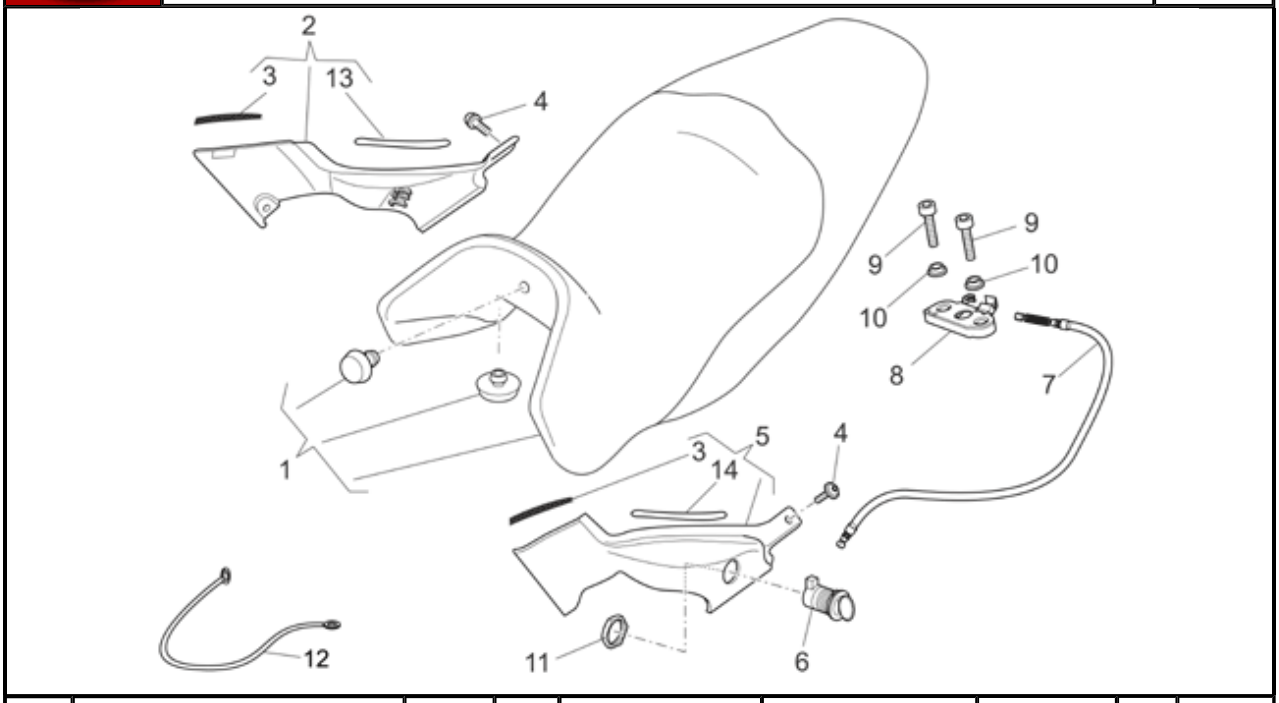

Pos.	Description	Year	I_M_	Country	Version	Code	Q.ty	P.Cod.
1	Saddle, black/grey	5-6	-	-	-	or-r/re-s/gr	GU05460530	1	DG009
	Saddle, black/grey	5-6	-	UK	-	g/bl	GU05460530	1	DG009
	Saddle, red	5-6	-	AUS-CA-EU-J-USA	-	g/bl	GU05460531	1	DG009
	Saddle, black	7	-	-	-	-	978249	1	DG009
2	RH side panel, orange	-	-	-	-	or	977559	1	DC12A
	RH body panel blank	-	-	-	-	gr	GU05570230	1	DC12A
	RH side panel, white	-	-	-	-	d/wh	GU05570230BM	1	DC12A
	RH side panel, red	-	-	-	-	r/re	GU05570231	1	DC12A
	RH side panel, black	-	-	-	-	g/bl	GU05570232	1	DC12A
	RH side panel, grey	-	-	-	-	s/gr	GU05570233	1	DC12A
3	Gasket	-	-	-	-	-	AP8144538	2	-
4	Screw w/ flange M5x9	-	-	-	-	-	AP8152339	2	-
5	LH side panel, white	-	-	-	-	d/wh	GU05570430BM	1	DC12B
	LH body panel blank	-	-	-	-	gr	GU05570430	1	DC12B
	LH side panel, red	-	-	-	-	r/re	GU05570431	1	DC12B
	LH side panel, black	-	-	-	-	g/bl	GU05570432	1	DC12B
	LH side panel, grey	-	-	-	-	s/gr	GU05570433	1	DC12B
	LH side panel, orange	-	-	-	-	or	977560	1	DC12B
6	Saddle lock	-	-	-	-	-	GU05466830	1	DH039
7	Saddle release cable	-	-	-	-	-	AP8102914	1	HA069
8	Pass.saddle connecting plate	-	-	-	-	-	AP8102913	1	DG019
9	Hex socket screw M6X25	-	-	-	-	-	GU98370625	2	-
10	Self-locking nut M6*	-	-	-	-	-	AP8152299	2	-
11	Lock nut	-	-	-	-	-	AP8102523	1	-
12	Helmet lock cable	-	-	-	-	-	AP8102502	1	HA079
13	RH side fairing decal	-	-	-	-	-	GU05573830	1	-
14	LH side fairing decal	-	-	-	-	-	GU05573831	1	-

BREVA V IE 1100 2005-2007	GU077	02	TAB N.	17
REAR BODY - MUDGUARD				

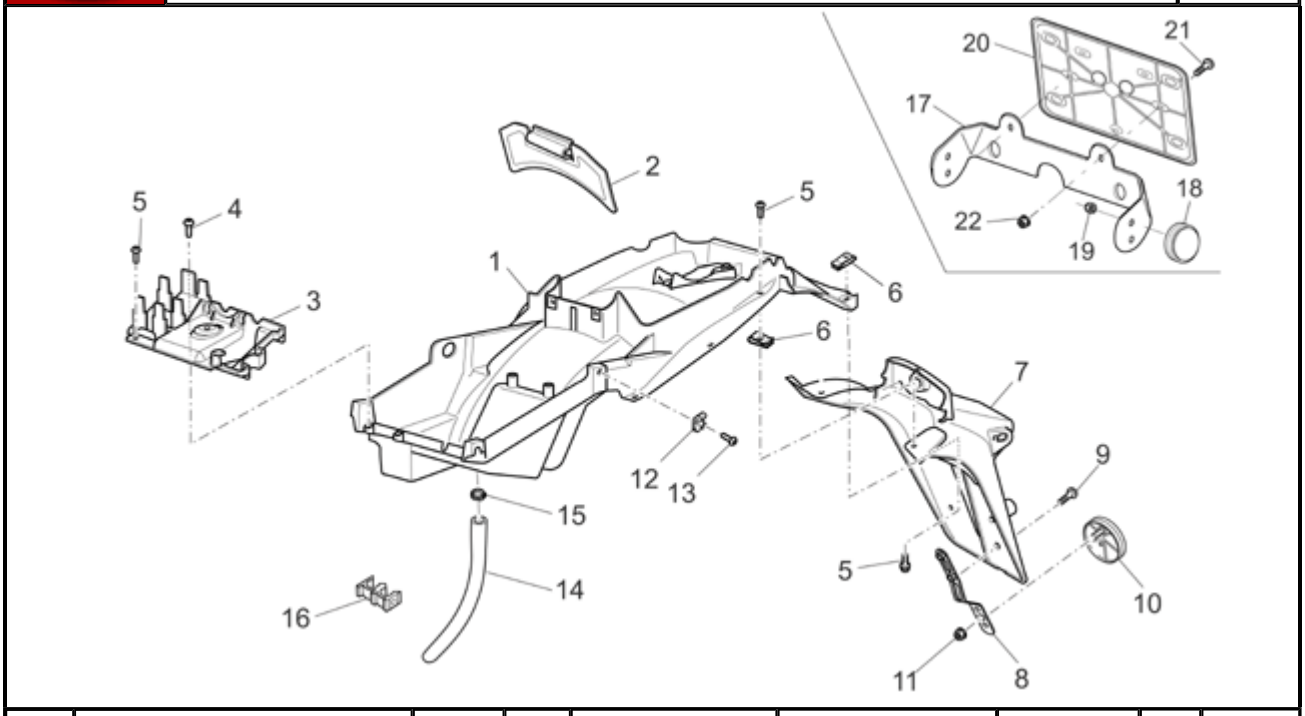

Pos.	Description	Year	I_M_	Country	Version	Code	Q.ty	P.Cod.
1	Splash guard	-	-	-	- -	GU05438730	1	DC139
2	Door	-	-	-	- -	GU05479630	1	-
3	Support	-	-	-	- -	GU05780530	1	-
4	Phillips screw, SWP M5X20	-	-	-	- -	AP8152329	2	-
5	Screw w/ flange M5x9	-	-	-	- -	AP8152339	7	-
6	Clip M5	-	-	-	- -	AP8102375	4	-
7	Number plate holder	-	-	-	- -	GU05438630	1	DC149
8	Reflector support	-	-	-	- -	AP8134448	1	CB21F
9	Hex socket screw M5x12*	-	-	-	- -	AP8152267	2	-
10	Rear reflector, red	-	-	-	- -	AP8224164	1	CB08F
11	Self-locking nut M5*	-	-	-	- -	AP8152306	1	-
12	Clip M6	-	-	-	- -	GU28576591	6	-
13	Hex socket screw M6X14	-	-	-	- -	GU98370614	6	-
14	Fuel pipe 6x10	-	-	-	- -	AP8144038	1	-
15	Hose clamp D10,1*	-	-	-	- -	AP8101595	1	-
16	Cable-guide D8	-	-	-	- -	AP8201808	2	-
17	Rear reflector support	-	-	CA-USA	- -	AP8258253	1	-
18	Rear reflector, red	-	-	CA-USA	- -	AP8224164	2	CB08F
19	Self-locking nut M5*	-	-	CA-USA	- -	AP8152306	2	-
20	Number plate holder	-	-	CA-USA	- -	AP8149034	1	DC149
21	Screw w/ flange M6X16	-	-	CA-USA	- -	GU98210616	2	-
22	Self-locking nut M6*	-	-	CA-USA	- -	AP8152299	2	-

BREVA V IE 1100 2005-2007	GU077	02	TAB N.	18
REAR BODY - REAR FAIRING				

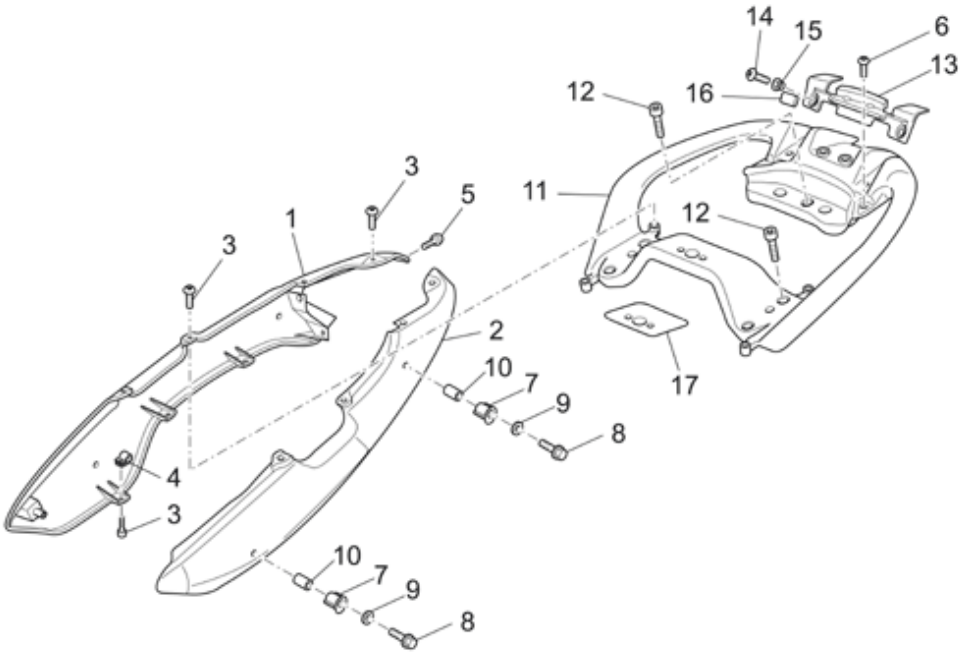

Pos.	Description	Year	I_M_	Country	Version	Code	Q.ty	P.Cod.
1	RH rear fairing, blank	-	-	-	- gr	GU05573230	1	DC10A
	RH rear fairing, white	-	-	-	- d/wh	GU05573230BM	1	DC10A
	RH rear fairing, red	-	-	-	- r/re	GU05573231	1	DC10A
	RH rear fairing, black	-	-	-	- g/bl	GU05573232	1	DC10A
	RH rear fairing, grey	-	-	-	- s/gr	GU05573233	1	DC10A
	RH rear fairing, orange	-	-	-	- or	977561	1	DC10A
2	LH rear fairing, orange	-	-	-	- or	977562	1	DC10B
	LH rear fairing, blank	-	-	-	- gr	GU05573330	1	DC10B
	LH rear fairing, white	-	-	-	- d/wh	GU05573330BM	1	DC10B
	LH rear fairing, red	-	-	-	- r/re	GU05573331	1	DC10B
	LH rear fairing, black	-	-	-	- g/bl	GU05573332	1	DC10B
	LH rear fairing, grey	-	-	-	- s/gr	GU05573333	1	DC10B
3	Screw w/ flange M5x9	-	-	-	- -	AP8152339	10	-
4	Clip M5	-	-	-	- -	AP8102375	10	-
5	Hex socket screw M5x15	-	-	-	- -	GU98682215	2	-
6	Screw w/ flange M5x12	-	-	-	- -	AP8152302	2	-
7	Hook	-	-	-	- -	GU05467330	4	-
8	Screw w/ flange M8x50*	-	-	-	- -	AP8152292	4	-
9	Washer 8,4x15	-	-	-	- -	GU03270300	4	-
10	Spacer 9x18x24	-	-	-	- -	GU91120924	4	-
11	Handle	-	-	-	- -	GU05464330	1	DC219
12	Hex socket screw M8x25	-	-	-	- -	GU98682425	5	-
13	Cover	-	-	-	- -	GU05464830	1	DC219
14	Hex socket screw M8x12	-	-	-	- -	AP8152055	2	-
15	T bush 8,2x12x4	-	-	-	- -	AP8121096	2	-
16	Rubber spacer	-	-	-	- -	AP8120455	2	-
17	Guard decal	-	-	-	- -	GU32944210	1	-

MOTO GUZZI	BREVA V IE 1100 2005-2007	GU077	02	TAB N.	19
	DASHBOARD				

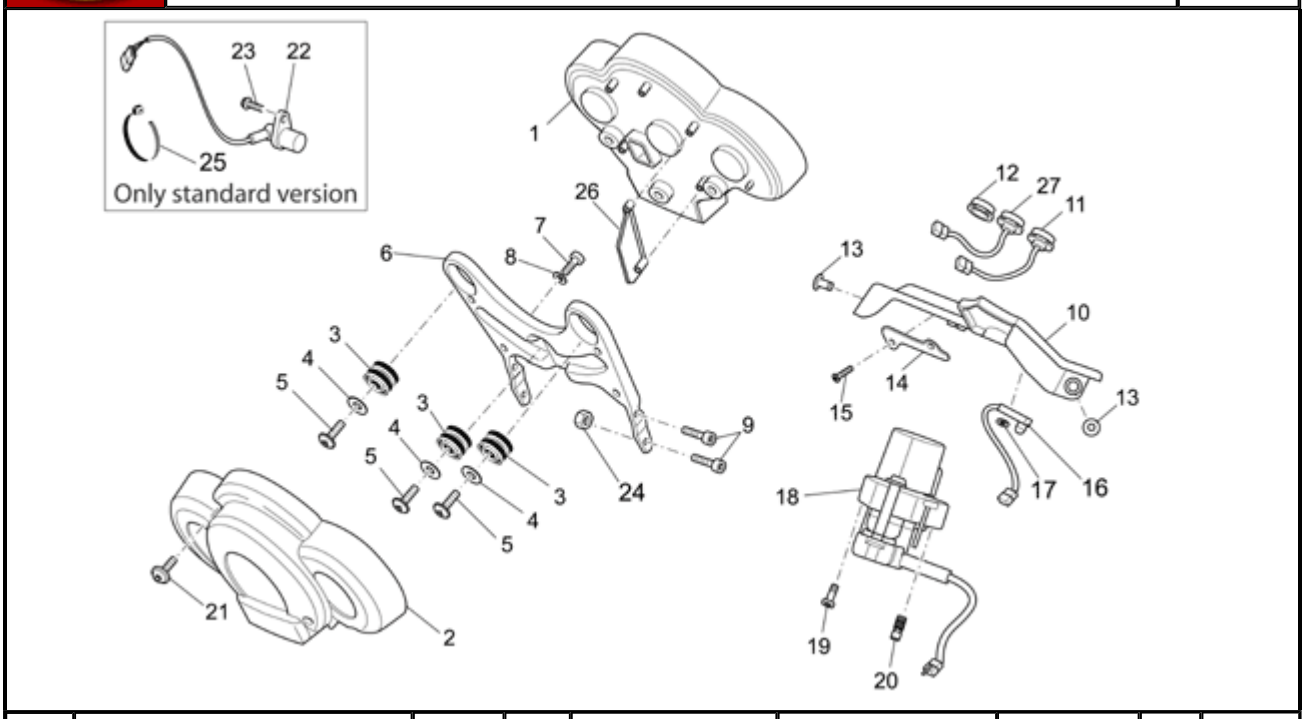

Pos.	Description	Year	I_M_	Country	Version		Code	Q.ty	P.Cod.
1	Dashboard complete	7	-	UK-USA	-	-	977524	1	JA009
	Dashboard complete	5-6	-	AUS-CA-EU-J	-	-	GU05760030	1	JA009
	Dashboard complete	5-6	-	UK-USA	-	-	GU05760031	1	JA009
	Dashboard complete	7	-	AUS-CA-EU-J	-	-	977523	1	JA009
2	Cover	-	-	-	-	-	GU05766530	1	JB119
3	Rubber spacer *	-	-	-	-	-	AP8220150	3	-
4	Washer 5x20x1,5	-	-	-	-	-	AP8150255	3	-
5	Self-tap screw 5x14	-	-	-	-	-	AP8150509	3	-
6	Support plate	-	-	-	-	-	GU05764030	1	JB099
7	Hex socket screw M8X16	-	-	-	-	-	GU98682416	1	-
8	Washer 8,4x15	-	-	-	-	-	GU03270300	1	-
9	Hex socket screw M6x12	-	-	-	-	-	GU98692313	4	-
10	Dashboard panel	-	-	-	-	-	GU05764330	1	JB039
11	Switch Hazard	5-6	-	-	-	-	GU05745730	1	JA189
12	Plug	-	-	-	abs	-	GU05764430	1	-
	Plug	-	-	-	std	-	GU05764430	2	-
13	Screw w/ flange M5x9	-	-	-	-	-	AP8152339	2	-
14	Plate	-	-	-	-	-	GU05764530	1	-
15	Self-tap screw 2,9x12	-	-	-	-	-	AP8150421	2	-
16	Air temp. Sensor	-	-	-	-	-	AP8124936	1	AN059
17	Washer for shafts	-	-	-	-	-	GU90274002	2	-
18	Main switch - steering lock	-	-	-	-	-	GU05782530	1	DH029
19	Hex socket screw M8x30	-	-	-	-	-	GU98682430	1	-
20	Shear rivet M8x28	-	-	-	-	-	AP8152238	1	-
21	Screw w/ flange M3x12	-	-	-	-	-	AP8152334	4	-
22	Speedometer sensor cpl.	-	-	-	std	-	AP8124985	1	CA209
23	Screw w/ flange M6x16*	-	-	-	std	-	AP8152278	1	-
24	Nut M6x1	-	-	-	-	-	GU92630206	2	-
25	Hose clamp 2,4x92	-	-	-	std	-	GU49609601	2	-
26	Protection	-	-	-	-	-	GU05767830	1	-
27	Switch ABS	-	-	-	abs	-	GU05780430	1	JA189

Revente Interdite - Revendita Vietata - Resaling Forbiden - Wiederverkauf Verboten

BREVA V IE 1100 2005-2007	GU077	02	TAB N.	20
HANDLEBAR - CONTROLS				

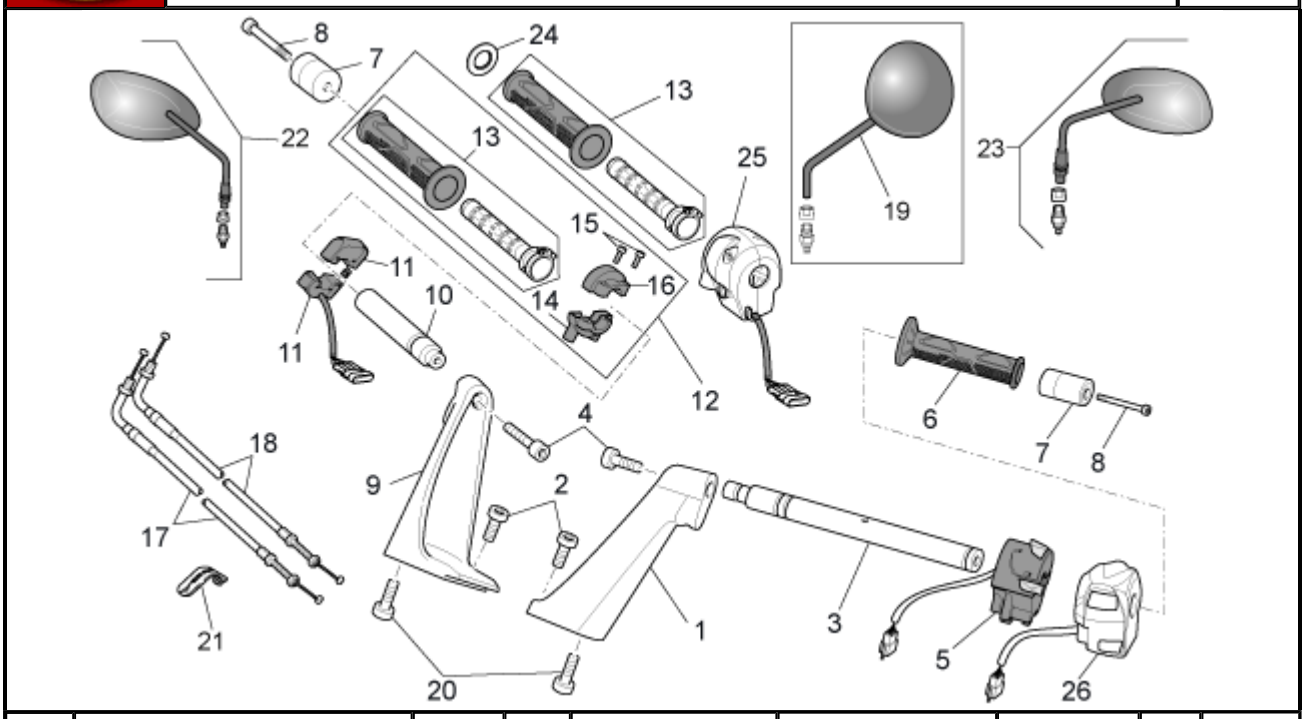

Pos.	Description	Year	I_M_	Country	Version		Code	Q.ty	P.Cod.
1	Left half handlebar	-	-	-	-	-	GU05600730	1	BC08B
2	Hex socket screw M8x25	-	-	-	-	-	GU98692425	4	-
3	LH handlebar tube	-	-	-	-	-	GU05600930	1	BC08B
4	Hex socket screw M8x30	-	-	-	-	-	GU98692430	2	-
5	LH lights selector	-	-	-	-	-	GU05738030	1	CD10B
6	LH hand grip	-	-	-	-	-	AP8118579	1	BC039
7	Anti.v weight, black	-	-	-	-	-	AP8104572	2	BC06*
8	Hex socket screw M6x60	-	-	-	-	-	GU98680360	2	-
9	Right half handlebar	-	-	-	-	-	GU05600630	1	BC08A
10	RH handlebar tube	-	-	-	-	-	GU05600230	1	BC08A
11	Engine stop-start device	5-6	-	-	-	-	851998	1	CD139
12	Throttle cpl.	5-6	-	-	-	-	GU05603331	1	BC019
13	RH hand grip	-	-	-	-	-	GU01603480	1	BC039
14	Front gas lever U-bolt	5-6	-	-	-	-	AP8118502	1	-
15	Cap screw	5-6	-	-	-	-	AP8118492	2	-
16	Rear gas lever U-bolt	5-6	-	-	-	-	AP8118503	1	-
17	Gas fastener	7	-	-	-	-	978314	1	HA029
	Gas fastener	5-6	-	-	-	-	GU05117530	1	HA029
18	Gas fastener	7	-	-	-	-	978315	1	HA029
	Gas fastener	5-6	-	-	-	-	GU05117830	1	HA029
19	Rearview mirror	-	-	-	1A	-	AP8104566	2	DC18*
20	Hex socket screw M8x25	-	-	-	-	-	GU98692425	2	-
21	Hose clamp L46 mm	-	-	-	-	-	GU01609630	2	-
	Hose clamp L36 mm	-	-	-	-	-	GU03609600	4	-
22	RH rearview mirror	-	-	-	2A	-	GU32769460	1	DC18A
23	LH rearview mirror	-	-	-	2A	-	GU32769860	1	DC18B
24	Nylon washer	7	-	-	-	-	977679	1	-
25	RH lights selector	7	-	-	1A	-	AP8127648	1	CD139
	RH lights selector	7	-	-	2A-YL	-	977780	1	CD139
26	LH lights selector	7	-	-	-	-	977522	1	CD10B

BREVA V IE 1100 2005-2007	GU077	02	TAB N.	21
FRONT MASTER CILINDER				

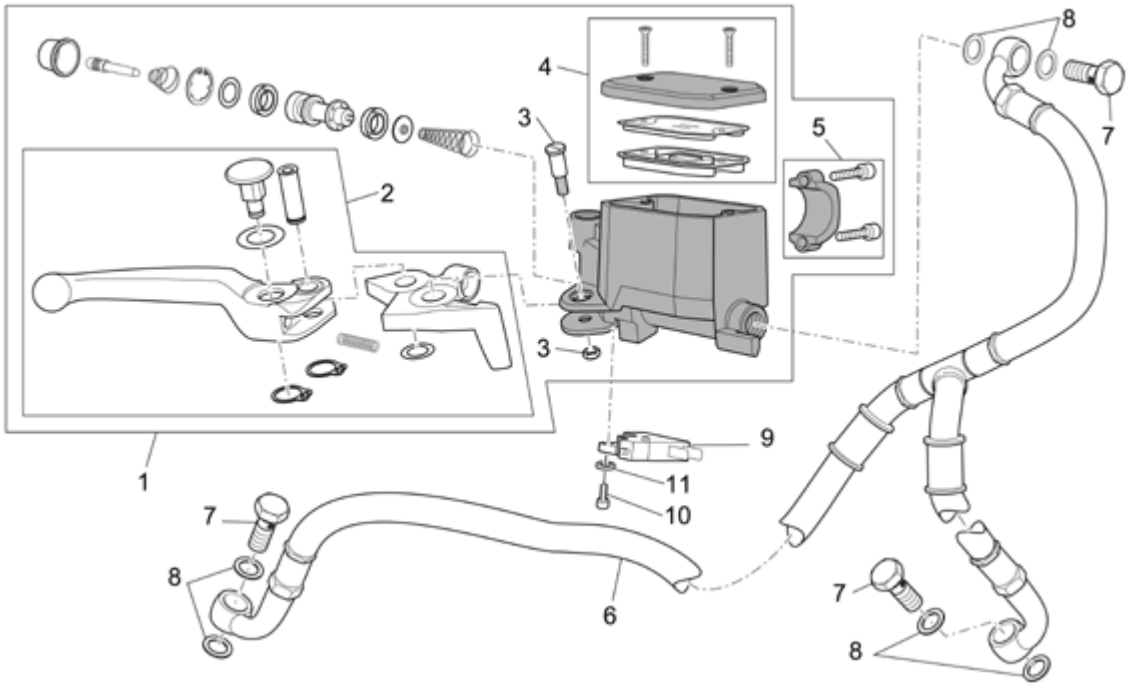

Pos.	Description	Year	I_M_	Country	Version		Code	Q.ty	P.Cod.
1	Front master cilinder	-	-	-	-	-	GU05660130	1	IA00E
2	Front brake lever	-	-	-	-	-	AP8133510	1	IA01E
3	Lever pin	-	-	-	-	-	AP8113995	1	IA01E
4	Tank cap	-	-	-	-	-	GU05661130	1	IA03A
5	U-bolt	-	-	-	-	-	AP8113993	1	IA029
6	Front brake hose	-	-	-	std	-	GU05658830	1	IA05E
7	Oil pipe screw	-	-	-	-	-	AP8133594	3	-
8	Gasket	-	-	-	-	-	GU25656100	6	-
9	Brake light switch	-	-	-	-	-	GU03749845	1	CD00E
10	Hex socket screw M4x12	-	-	-	-	-	GU98370412	1	-
11	Washer 4,3x8x1,5	-	-	-	-	-	GU95021104	1	-

BREVA V IE 1100 2005-2007	GU077	02	TAB N.	22
CLUTCH CONTROL COMPLETE				

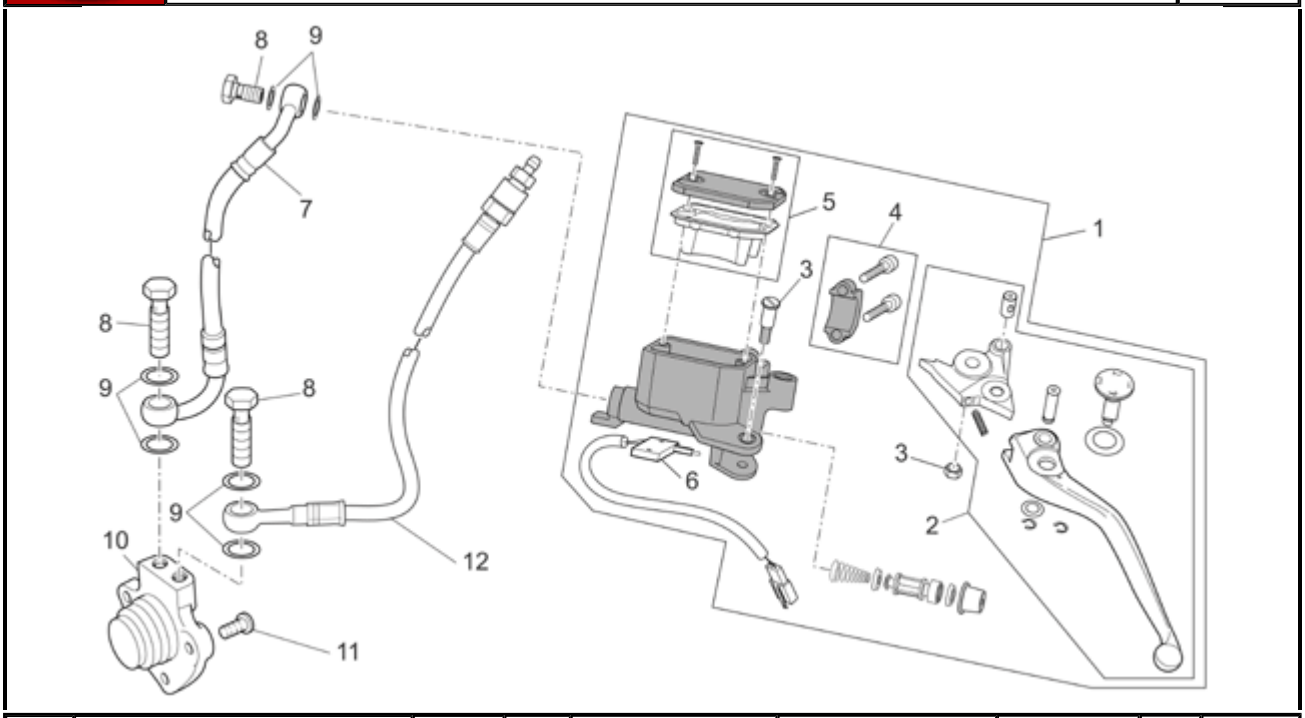

Pos.	Description	Year	I_M_	Country	Version	Code	Q.ty	P.Cod.
1	Clutch pump	-	-	-	- -	AP8106713	1	BC099
2	Clutch lever	-	-	-	- -	AP8118659	1	BC059
3	Lever pin	-	-	-	- -	GU03604845	1	-
4	U-bolt	-	-	-	- -	AP8113993	1	-
5	Tank cap	-	-	-	- -	AP8113997	1	BC249
6	Microswitch	-	-	-	- -	AP8113998	1	CD159
7	Clutch pipe	-	-	-	- -	GU05606530	1	BC169
8	Oil pipe screw	-	-	-	- -	AP8133594	3	IA15E
9	Gasket	-	-	-	- -	AP8121915	6	-
10	Clutch command cylinder	-	-	-	- -	GU05086330	1	BC139
11	Screw w/ flange M6x16*	-	-	-	- -	AP8152278	3	-
12	Float chambe clutch pipe	-	-	-	- -	GU05606630	1	BC169

BREVA V IE 1100 2005-2007	GU077	02	TAB N.	23
OIL COOLER				

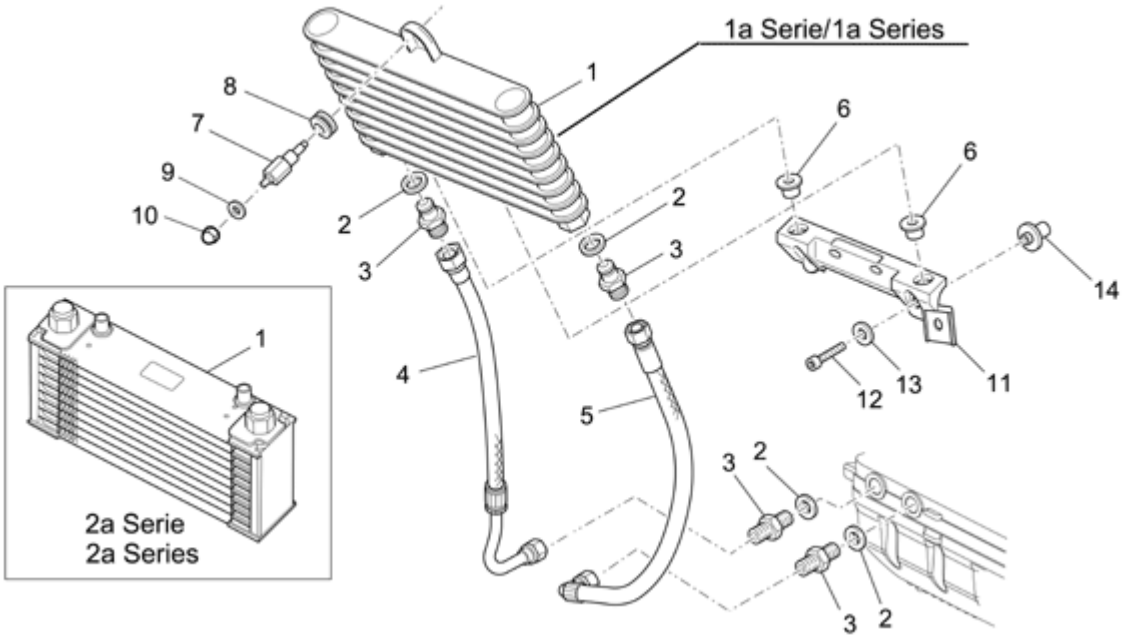

Pos.	Description	Year	I_M_	Country	Version		Code	Q.ty	P.Cod.
1	Oil cooler cpl.	-	-	-	2A	-	GU05162031	1	GD009
	Oil cooler cpl.	-	-	-	1A-O1	-	GU05162030	1	GD009
2	Gasket	-	-	-	-	-	GU01154230	4	-
3	Reduction	-	-	-	-	-	GU01161331	4	-
4	RH pipe	-	-	-	-	-	GU05162331	1	GD029
5	LH pipe	-	-	-	-	-	GU05161631	1	GD019
6	Silent-block	-	-	-	-	-	AP8101372	2	-
7	Special screw	-	-	-	-	-	GU05164630	1	-
8	Rubber spacer	-	-	-	-	-	GU91551010	1	-
9	Washer 5,2x18x1,5	-	-	-	-	-	GU95005304	1	-
10	Cap nut M5x0,8	-	-	-	-	-	GU92787205	1	-
11	Clamp	-	-	-	-	-	GU05164230	1	GD049
12	Hex socket screw M6X40	-	-	-	-	-	GU98680340	2	-
13	Washer 6,4x13x1,5	-	-	-	-	-	GU95005306	2	-
14	Bush 6,2x11x22,5	-	-	-	-	-	GU91120622	2	-

Revente Interdite - Revendita Vietata - Resaling Forbiden - Wiederverkauf Verboten

BREVA V IE 1100 2005-2007	GU077	02	TAB N.	24
BLOW-BY SYSTEM				

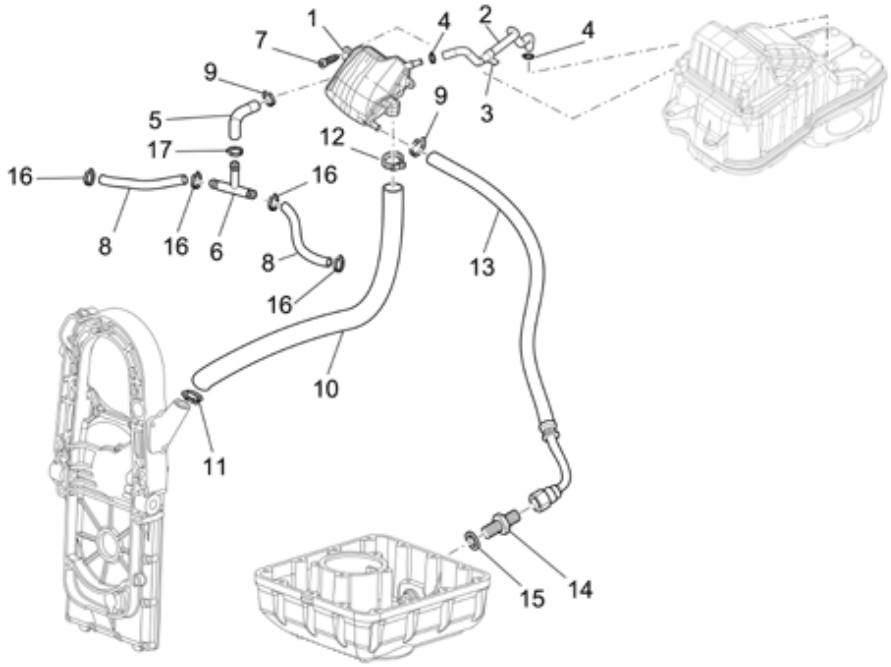

Pos.	Description	Year	I_M_	Country	Version	Code	Q.ty	P.Cod.
1	Housing	-	-	-	- -	GU05153430	1	GD059
2	Breather pipe	-	-	-	- -	GU05157430	1	GD069
3	Black hose D12*	-	-	-	- -	AP8102151	1	-
4	Hose clamp	-	-	-	- -	AP8102520	2	-
5	Breather pipe	-	-	-	- -	GU05159630	1	-
6	3-way union	-	-	-	- -	GU95960609	1	-
7	Self-tap screw 5x14	-	-	-	- -	AP8150509	2	-
8	Breather pipe	-	-	-	- -	GU00823955080	2	-
9	Hose clip D.15,5x6,6	-	-	-	- -	AP8101586	2	-
10	Breather pipe	-	-	-	- -	GU05157630	1	GD069
11	Hose clip D.24,5x8,6	-	-	-	- -	AP8101588	1	-
12	Hose clamp 17X29X8	-	-	-	- -	GU93306018	1	-
13	Pipe	-	-	-	- -	GU05159330	1	GD069
14	Reduction	-	-	-	- -	GU01161331	1	-
15	Gasket	-	-	-	- -	GU01154230	1	-
16	Hose clamp D 11,9	-	-	-	- -	AP8201358	4	-
17	White hose clip D.13,5x6	-	-	-	- -	AP8102765	1	-

BREVA V IE 1100 2005-2007	GU077	02	TAB N.	25
FUEL SUPPLY				

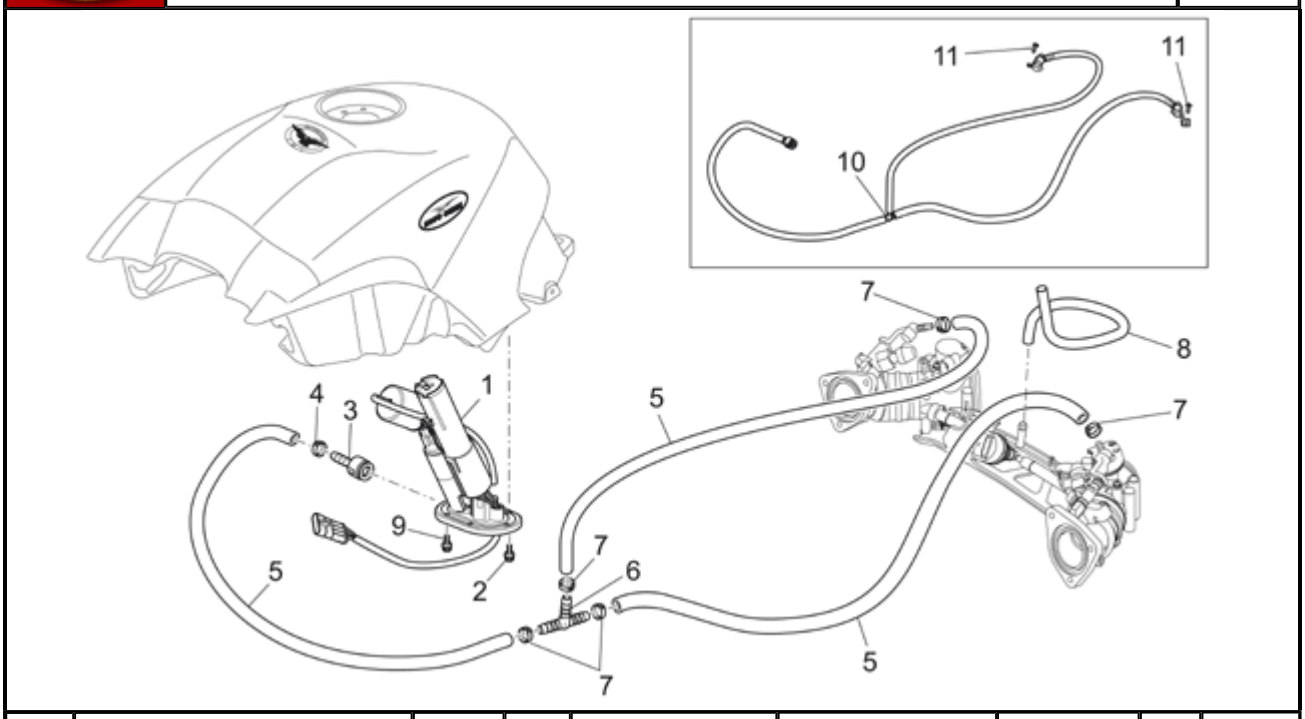

Pos.	Description	Year	I_M_	Country	Version		Code	Q.ty	P.Cod.
1	Fuel pump cpl.	-	-	-	-	-	GU05107230	1	DA139
2	Screw w/ flange M5x16	-	-	-	-	-	AP8152273	4	-
3	Union	-	-	-	1A	-	GU01106692	1	DA409
4	White hose clip d.13x6	-	-	-	1A	-	AP8102764	1	-
5	Fuel pipe 6x13	-	-	-	1A	-	AP8144069	3	DA399
6	3-way union	-	-	-	1A	-	AP8120116	1	DA319
7	Hose clamp 12,5x8	-	-	-	1A	-	AP8102239	5	-
8	Pipe	-	-	-	-	-	GU05135930	1	-
9	Screw w/ flange M5X20	-	-	-	-	-	AP8152274	2	-
10	Fuel pipe, cpl.	-	-	-	2A	-	977149	1	DA399
11	Screw w/ flange M5x16	-	-	-	-	-	AP8152298	2	-

BREVA V IE 1100 2005-2007	GU077	02	TAB N.	26
AIR BOX				

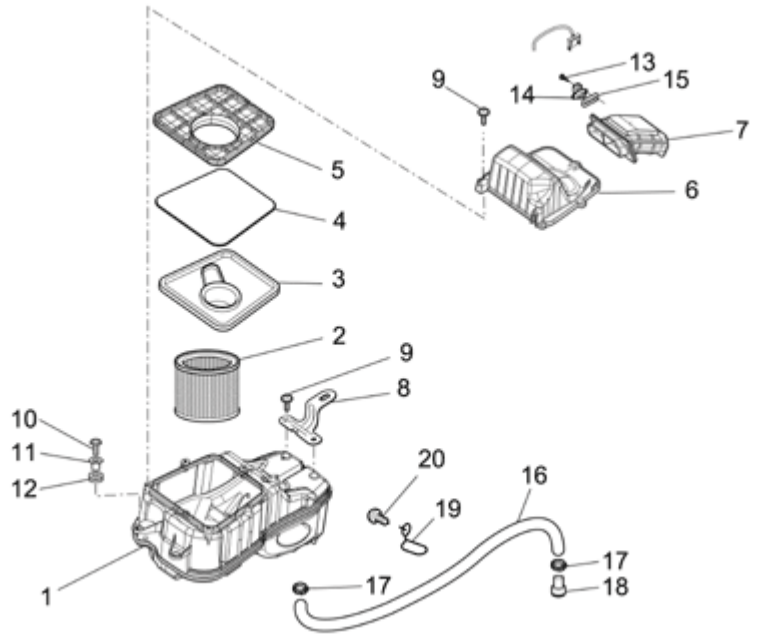

Pos.	Description	Year	I_M_	Country	Version	Code	Q.ty	P.Cod.
1	Air box	-	-	-	- -	GU05114031	1	EB019
2	Air filter	-	-	-	- -	AP8104211	1	EB029
3	Protection	-	-	-	- -	GU05113730	1	EB209
4	Gasket D3	-	-	-	- -	AP8120615	1	EB129
5	Adhesive sponge	-	-	-	- -	GU05103830	1	EB079
6	Cover	-	-	-	- -	GU05113530	1	EB099
7	Intake hose	-	-	-	- -	AP8144164	1	EB059
8	Air box support	-	-	-	- -	GU05114130	1	EB229
9	Phillips screw, SWP M5X20	-	-	-	- -	AP8152329	7	-
10	Screw w/ flange M6x20	-	-	-	- -	AP8152279	2	-
11	T bush *	-	-	-	- -	AP8221023	2	-
12	Rubber spacer *	-	-	-	- -	AP8120030	2	-
13	Self-tap screw 2,9x12	-	-	-	- -	AP8150421	2	-
14	Air temp. Sensor	-	-	-	- -	GU30729330	1	AN059
15	Gasket	-	-	-	- -	GU30027931	1	-
16	Fuel pipe 6x10	-	-	-	- -	AP8144038	1	-
17	Hose clamp D10,1*	-	-	-	- -	AP8101595	2	-
18	Plug	-	-	-	- -	AP8120876	1	-
19	Cable-guide	-	-	-	- -	AP8120428	1	-
20	Screw w/ flange M6x16*	-	-	-	- -	AP8152278	1	-

BREVA V IE 1100 2005-2007	GU077	02	TAB N.	27
EXHAUST UNIT				

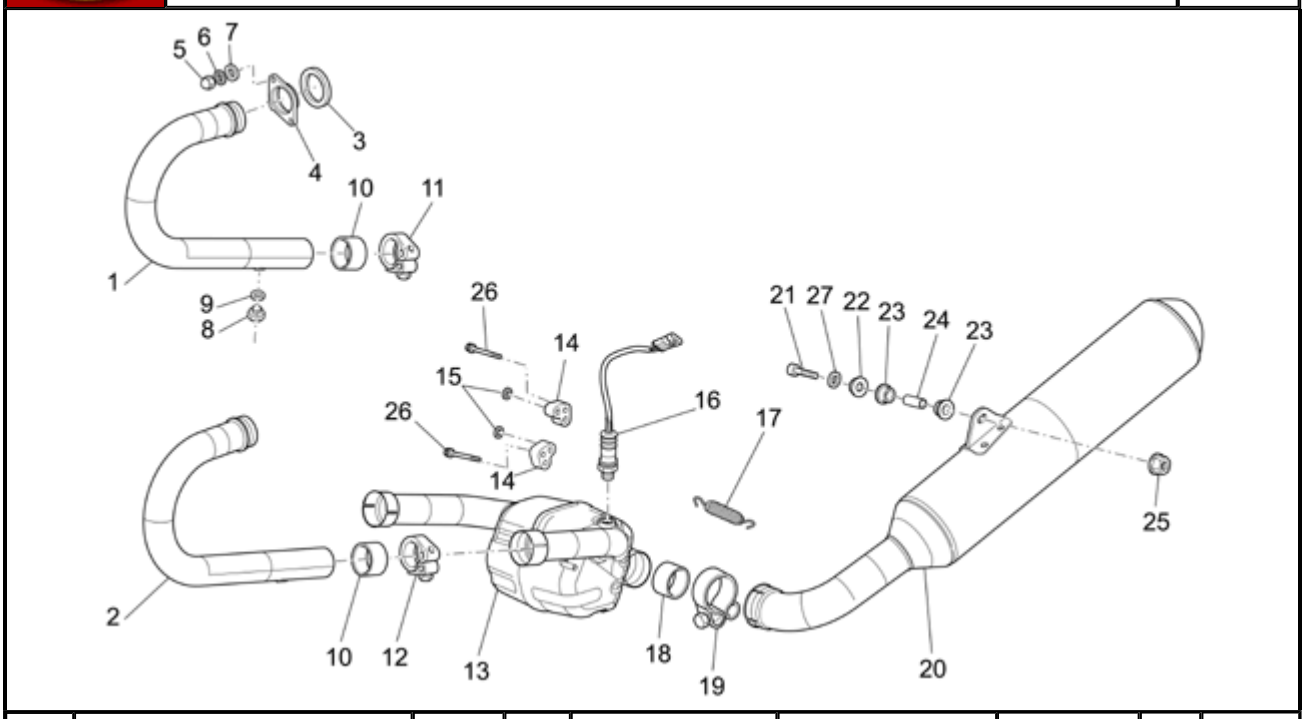

Pos.	Description	Year	I_M_	Country	Version	Code	Q.ty	P.Cod.
1	RH exhaust pipe	-	-	-	- -	GU05120930	1	FA00A
2	LH exhaust pipe	-	-	-	- -	GU05120931	1	FA00B
3	Gasket	-	-	-	- -	GU90718370	2	AO03*
4	Flange	-	-	-	- -	GU01121030	2	FA03*
5	Cap nut M8x1,25	-	-	-	- -	GU92787008	4	-
6	Washer 8,4X13X0,8	-	-	-	- -	GU14615901	4	-
7	Washer 8,4x14,57x1,6	-	-	-	- -	GU95005308	4	-
8	Plug	-	-	-	- -	GU98110007	2	-
9	Gasket	-	-	-	- -	GU30109330	2	-
10	Gasket	-	-	-	- -	GU05121630	2	-
11	RH hose clamp	-	-	-	- -	GU05123430	1	-
12	LH hose clamp	-	-	-	- -	GU05123431	1	-
13	Expansion chamber	-	-	-	- -	GU05123930	1	FA029
14	Rubber spacer	-	-	-	- -	GU05124230	2	-
15	Washer for shafts D8	-	-	-	- -	GU90274008	4	-
16	Lamda sensor	-	-	-	- -	GU32727010	1	AN079
17	Spring	-	-	-	- -	AP8121170	1	FA049
18	Gasket	-	-	-	- -	GU05128230	1	FC019
19	Hose clamp	-	-	-	- -	GU05126930	1	-
20	Silencer	-	-	-	- -	GU05122930	1	FC009
21	Hex socket screw M8X45	-	-	-	- -	GU98680445	1	-
22	Silencer fixing bush	-	-	-	- -	AP8134378	1	-
23	Rubber exhaust	-	-	-	- -	AP8144071	2	-
24	Spacer	-	-	-	- -	AP8121072	1	-
25	Nut M8x1,25	-	-	-	- -	GU92650138	1	-
26	Screw	-	-	-	- -	GU05124330	2	-
27	Washer 8,5x24x2	-	-	-	- -	GU95005312	1	-

BREVA V IE 1100 2005-2007	GU077	02	TAB N.	28
INTERNAL FUEL PUMP				

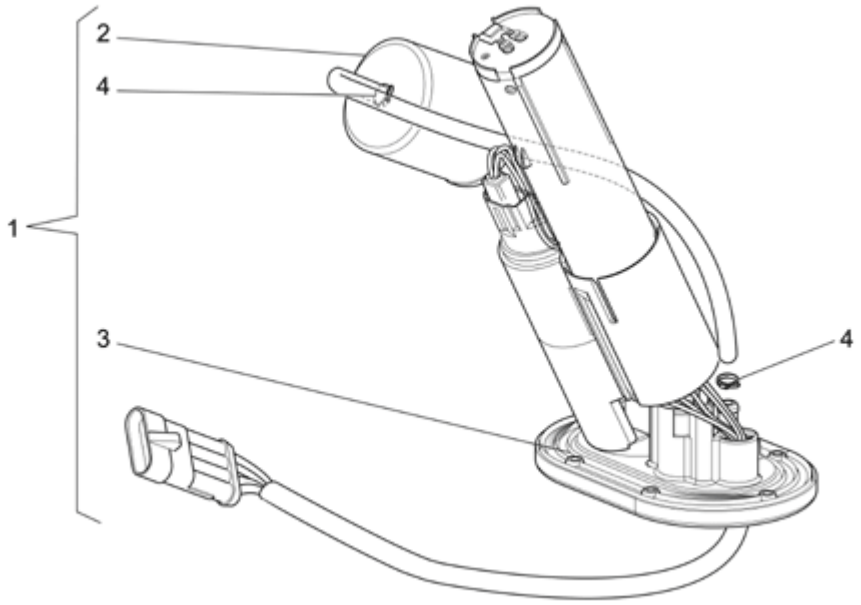

Pos.	Description	Year	I_M_	Country	Version	Code	Q.ty	P.Cod.
1	Fuel pump cpl.	-	-	-	- -	GU05107230	1	DA139
2	Fuel filter	-	-	-	- -	GU01106090	1	DA099
3	Gasket	-	-	-	- -	GU05107430	1	DA429
4	Hose clamp 11,3	-	-	-	- -	GU01108490	4	-

MOTO GUZZI	BREVA V IE 1100 2005-2007	GU077	02	TAB N.	29
	FRONT WHEEL				

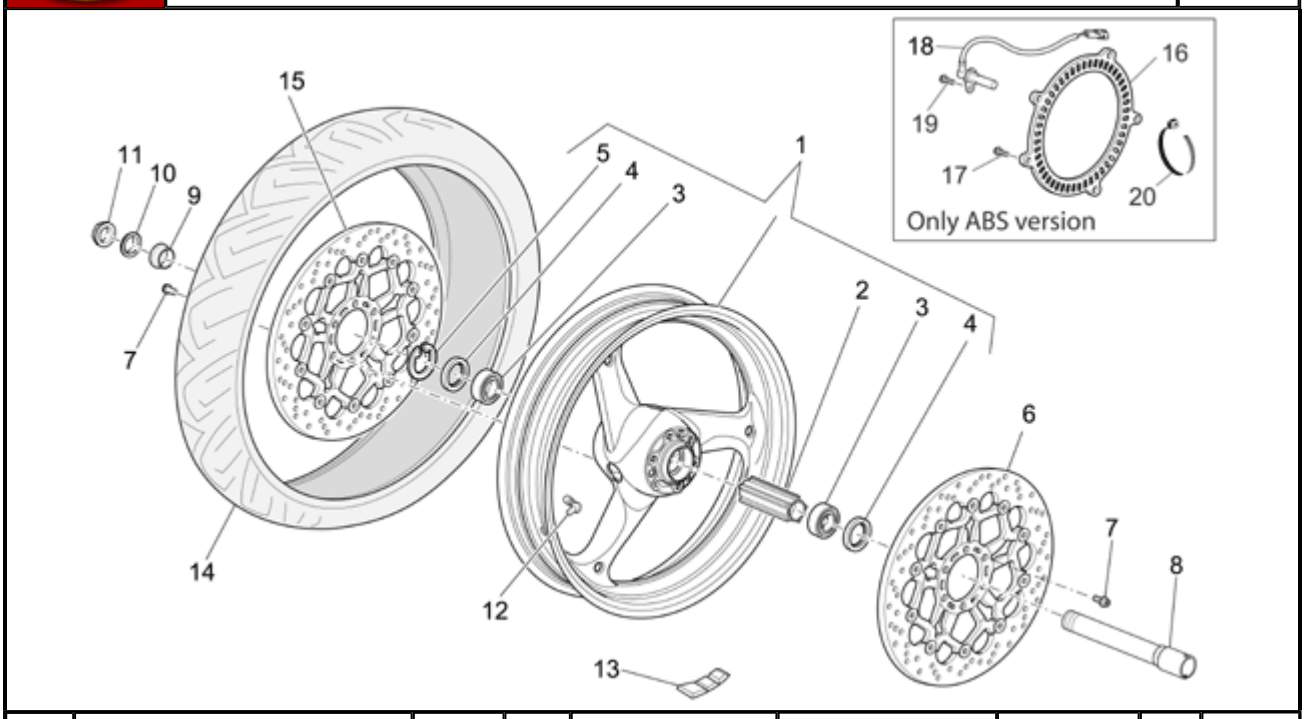

Pos.	Description	Year	I_M_	Country	Version		Code	Q.ty	P.Cod.
1	Front wheel, black 3,5x17"	-	-	-	-	-	GU05610330	1	BB00E
2	Spacer	-	-	-	-	-	GU05615230	1	BB32E
3	Ball bearing 25x47x12	-	-	-	-	-	AP8125777	2	BB01E
4	Gasket ring 30x47x7	-	-	-	-	-	AP8125773	2	-
5	Circlip	-	-	-	-	-	AP8125779	1	-
6	Front brake disc, gold 320	-	-	-	-	-	GU05613330	1	IA08U
7	Screw M8x16	-	-	-	-	-	GU05611430	12	IA09*
8	Front wheel spindle	-	-	-	-	-	GU05614130	1	BB03E
9	Spacer	-	-	-	-	-	AP8125791	1	-
10	Washer 25,2X36X1	-	-	-	-	-	GU95005325	1	-
11	Nut	-	-	-	-	-	GU01612190	1	BB24E
12	Tubeless tyre valve	-	-	-	-	-	GU03617710	1	BB07E
13	Counterweight	-	-	-	-	-	GU14616150	1	BB29E
14	Front/rear tyre 120/70-17"	-	-	-	-	-	0000000	1	BB04E
15	Front brake disc, gold 320	-	-	-	std	-	GU05613330	1	IA08T
	Front brake disc, gold 320	-	-	-	abs	-	GU05613335	1	IA08T
16	Wheel speed sensor, left front	-	-	-	abs	-	GU05681430	1	IC03E
17	Screw M5x10	-	-	-	abs	-	GU98250510	5	-
18	Sensor abs	-	-	-	abs	-	AP8127469	1	IC04E
19	Screw w/ flange M6x16*	-	-	-	abs	-	AP8152278	1	-
20	Hose clamp 2,4x92	-	-	-	abs	-	GU49609601	1	-

MOTO GUZZI	BREVA V IE 1100 2005-2007	GU077	02	TAB N.	30

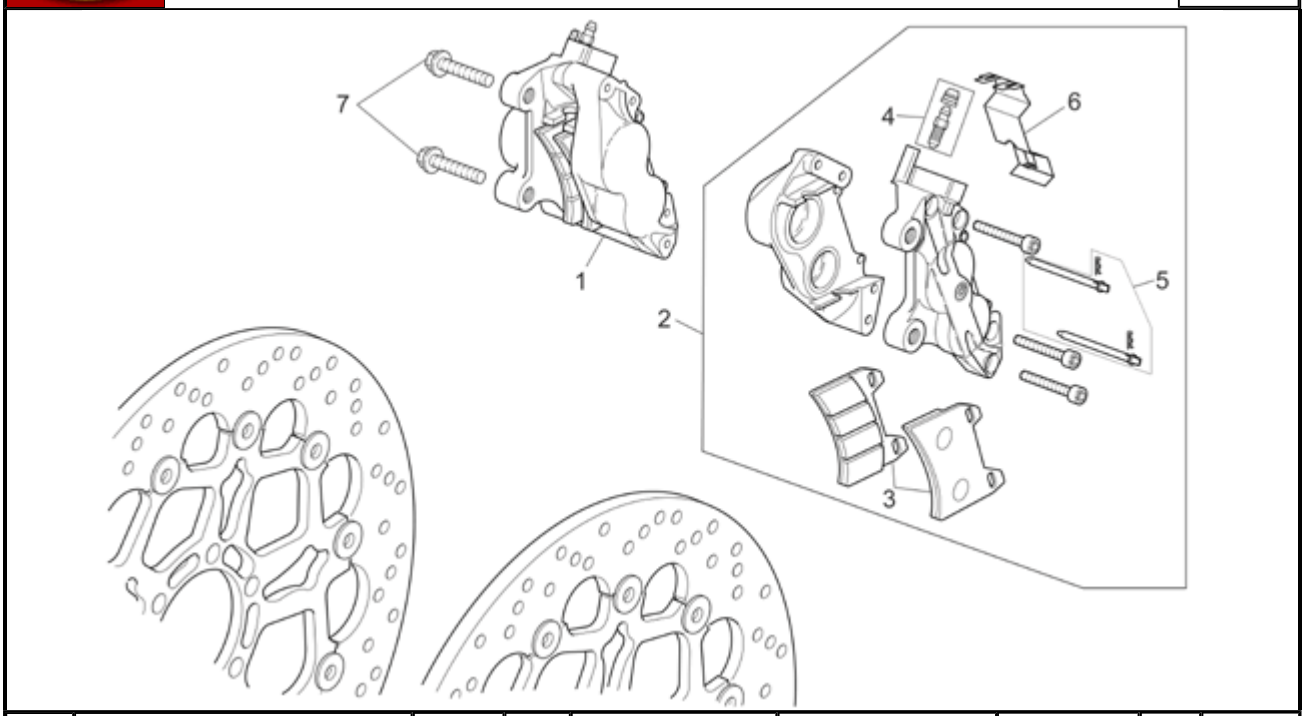

Pos.	Description	Year	I_M_	Country	Version		Code	Q.ty	P.Cod.
1	RH Front brake caliper, gold	-	-	-	-	-	GU05652330	1	IA06T
2	LH Front brake caliper, gold	-	-	-	-	-	GU05652230	1	IA06U
3	Pads pair	-	-	-	-	-	GU01654630	2	IA07*
4	Bleeder+cap	-	-	-	-	-	GU05659230	2	IA11E
5	Pins+Caliper springs	-	-	-	-	-	GU01659130	2	IA11E
6	Spring	-	-	-	-	-	GU01659131	2	IA11E
7	Hex socket screw M10x1,25	-	-	-	-	-	AP8152385	4	IA30*

BREVA V IE 1100 2005-2007	GU077	02	TAB N.	31
REAR WHEEL				

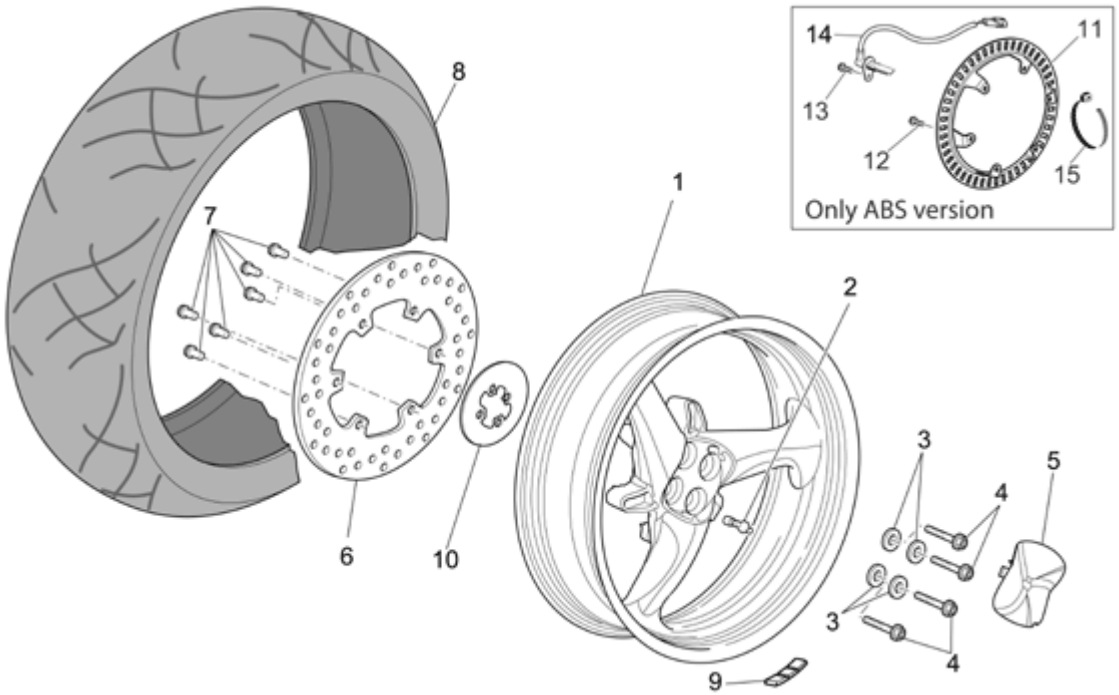

Pos.	Description	Year	I_M_	Country	Version		Code	Q.ty	P.Cod.
1	Rear wheel, black 5,5x17"	-	-	-	abs	-	GU05630531	1	BB00F
	Rear wheel, black 5,5x17"	-	-	-	std	-	GU05630530	1	BB00F
2	Tubeless tyre valve	-	-	-	-	-	GU03617710	1	BB07F
3	Conical bush	-	-	-	-	-	GU05632730	4	BB06F
4	Screw w/ flange M12x65	-	-	-	-	-	GU97202665	4	BB06F
5	Cover	-	-	-	-	-	GU05634430	1	BB10F
6	Rear brake disc	-	-	-	-	-	GU05635730	1	IA08F
7	Screw	-	-	-	-	-	GU30611460	6	IA09F
8	Rear tyre 180/55-17"	-	-	-	-	-	0000000	1	BB04F
9	Counterweight	-	-	-	-	-	GU14616150	1	BB29F
10	Dust cover ring	-	-	-	T3	-	977056	1	-
11	Wheel speed sensor, left front	-	-	-	abs	-	GU05681530	1	IC03F
12	Screw w/ flange M5x12	-	-	-	abs	-	AP8152272	6	-
13	Sensor	-	-	-	abs	-	GU05683730	1	IC04F
14	Screw w/ flange M6x16*	-	-	-	abs	-	AP8152278	1	-
15	Hose clamp 2,4x92	-	-	-	abs	-	GU49609601	1	-

BREVA V IE 1100 2005-2007	GU077	02	TAB N.	32
REAR MASTER CYLINDER				

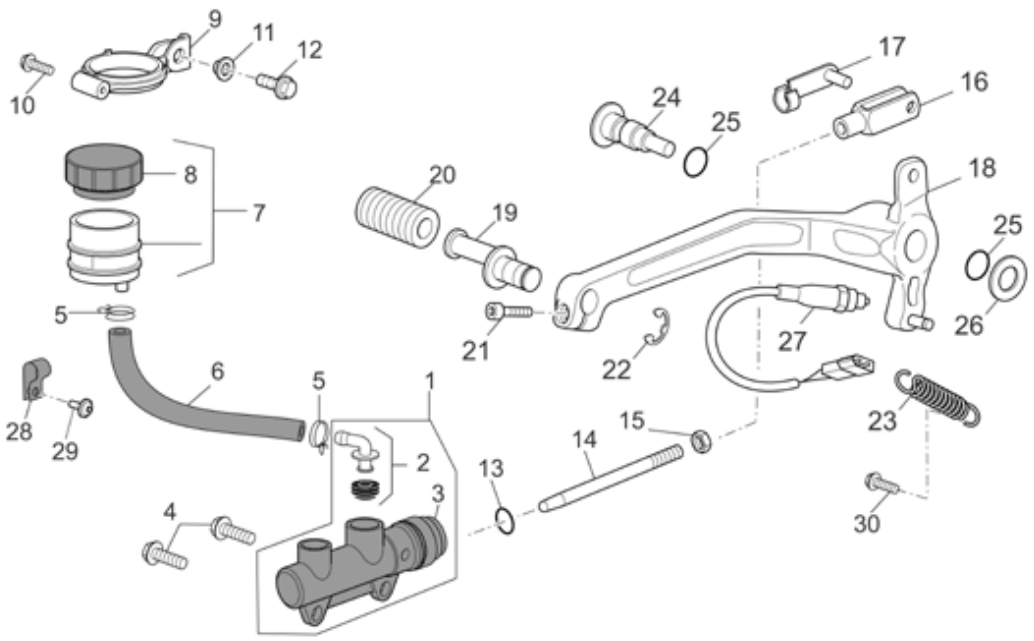

Pos.	Description	Year	I_M_	Country	Version	Code	Q.ty	P.Cod.
1	Rear master cylinder	-	-	-	- -	GU05666930	1	IA00F
2	Rear brake pump union	-	-	-	- -	AP8113594	1	-
3	Rubber bellows	-	-	-	- -	AP8113288	1	-
4	Screw w/ flange M6x20	-	-	-	- -	AP8152279	2	-
5	Hose clamp D10,1*	-	-	-	- -	AP8101595	2	-
6	Oil pipe	-	-	-	- -	GU00823950050	1	IA319
7	Brake oil tank complete	-	-	-	- -	GU05663530	1	IA12F
8	Tank cap	-	-	-	- -	GU17661052	1	IA329
9	Tank support	-	-	-	- -	GU05666030	1	-
10	Phillips screw, SWP M5X20	-	-	-	- -	AP8152329	1	-
11	T bush *	-	-	-	- -	AP8221145	1	-
12	Screw w/ flange M6x16*	-	-	-	- -	AP8152278	1	-
13	O-ring OR112	-	-	-	- -	AP8120178	1	-
14	Master cylinder rod	-	-	-	- -	977041	1	IA199
15	Nut M6*	-	-	-	- -	GU92606206	1	-
16	Fork	-	-	-	- -	AP8101968	1	IA209
17	Gear selector fork clips	-	-	-	- -	AP8201301	1	-
18	Rear brake lever	-	-	-	- -	GU05677030	1	IA01F
19	Brake lever pin	-	-	-	- -	AP8121221	1	-
20	Lever rubber	-	-	-	- -	AP8120912	1	IA169
21	Hex socket screw M6x16	-	-	-	- -	GU98682316	1	-
22	Circlip d9	-	-	-	- -	AP8150462	1	-
23	Rear brake lever spring	-	-	-	- -	AP8121927	1	IA229
24	Rear brake lever pin	-	-	-	- -	AP8121223	1	IA179
25	O-ring 11,11x1,78	-	-	-	- -	AP8144007	2	-
26	Washer 10,5x22x2,5	-	-	-	- -	GU95008310	1	-
27	Brake light switch	-	-	-	- -	AP8112996	1	CD00F
28	Black hose D12*	-	-	-	- -	AP8102151	1	-
29	Hex socket screw M5X10	-	-	-	- -	GU98350210	1	-
30	Screw w/ flange M5x16	-	-	-	- -	AP8152273	1	-

BREVA V IE 1100 2005-2007	GU077	02	TAB N.	33
REAR BRAKE CALIPER				

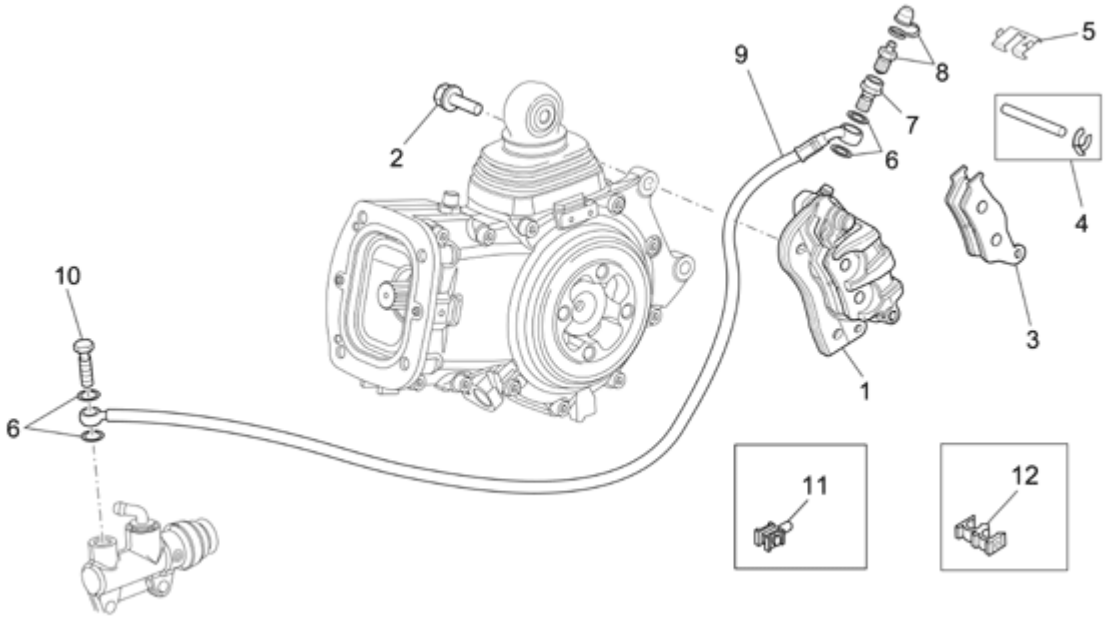

Pos.	Description	Year	I_M_	Country	Version		Code	Q.ty	P.Cod.
1	Rear brake caliper, gold	-	-	-	-	-	GU05653030	1	IA06F
2	Screw w/ flange M10x30*	-	-	-	-	-	AP8152320	2	IA30F
3	Pads pair	-	-	-	-	-	GU05654630	1	IA07F
4	Pin+split pin	-	-	-	-	-	GU05659130	1	IA11F
5	Spring	-	-	-	-	-	GU05659030	1	IA11F
6	Gasket	-	-	-	-	-	GU25656100	4	-
7	Screw	-	-	-	-	-	AP8133597	1	-
8	Bleeder+cap	-	-	-	-	-	AP8213113	1	IA11F
9	Rear brake hose	-	-	-	std	-	GU05657530	1	IA05F
10	Oil pipe screw	-	-	-	-	-	AP8133594	1	-
11	Cable-guide hook	-	-	-	-	-	AP8202238	4	-
12	Cable-guide D5	-	-	-	abs	-	GU05436530	4	-
	Cable-guide D8	-	-	-	std	-	AP8201808	4	-

BREVA V IE 1100 2005-2007	GU077	02	TAB N.	34
HEADLIGHT/HORN				

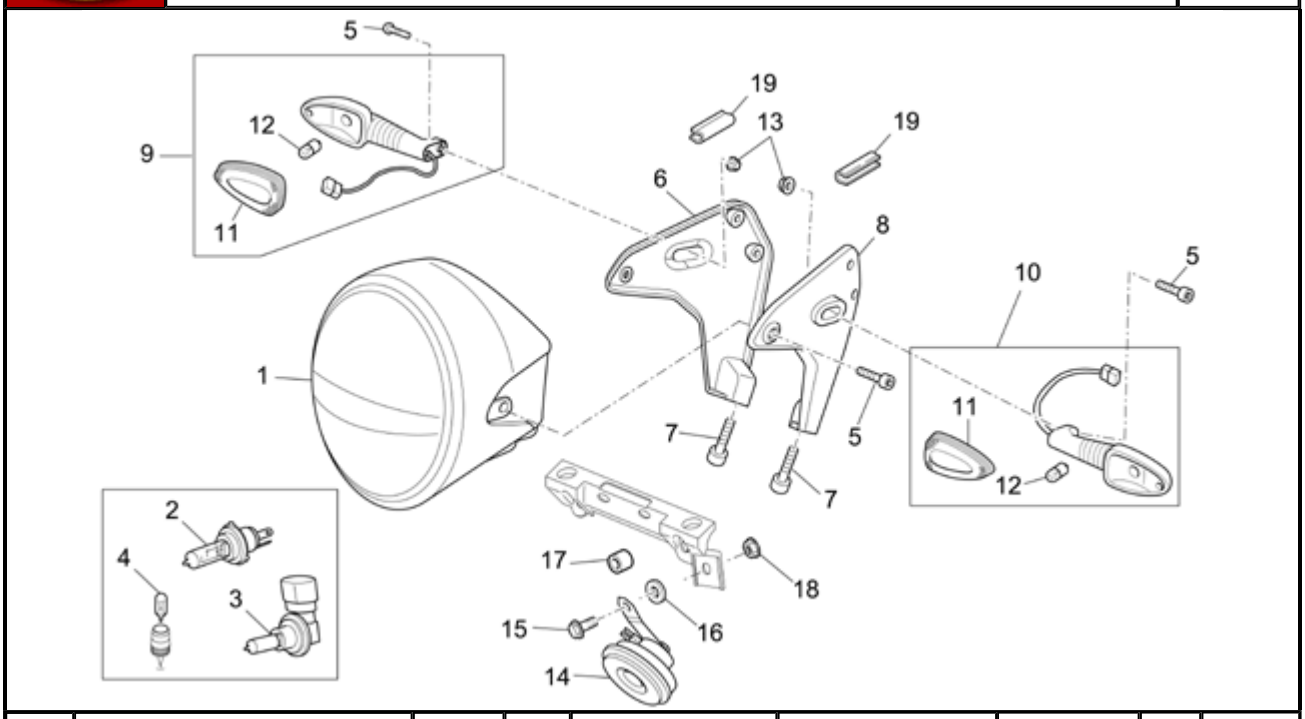

Pos.	Description	Year	I_M_	Country	Version		Code	Q.ty	P.Cod.
1	Cpl headlightsteering headligh	-	-	AUS-J-UK	-	-	GU05740531	1	CB109
	Headlight	-	-	CA-USA	-	-	GU05740532	1	CB109
	Headlight	-	-	EU	-	-	GU05740530	1	CB109
2	Lamp H7-12V-55W	-	-	-	-	-	AP8127109	1	CB149
3	Lamp H9-12V-65W	-	-	-	-	-	GU93450265	1	CB149
4	Lamp 12V-5W	-	-	-	-	-	GU93450105	1	CB149
5	Hex socket screw M6x18	-	-	-	-	-	GU98692318	4	-
6	RH support	-	-	-	-	-	GU05578630	1	BC129
7	Hex socket screw M8X35	-	-	-	-	-	GU98682435	2	-
8	LH support	-	-	-	-	-	GU05578631	1	BC129
9	RH front turn indicator	-	-	-	-	-	AP8127514	1	CB09T
10	LH front turn indicator	-	-	-	-	-	AP8127515	1	CB09U
11	Turn indicator lens	-	-	-	-	-	AP8127552	2	CB01*
12	Lamp, orange 12V-10W	-	-	-	-	-	GU93450126	2	-
13	Nut M6x1	-	-	-	-	-	GU92630206	2	-
14	Horn	-	-	-	-	-	GU05743730	1	CB069
15	Screw w/ flange M8x16*	-	-	-	3A	-	AP8152285	1	-
	Screw w/ flange M8x20	-	-	-	2A	-	AP8152286	1	-
	Screw w/ flange M8x40*	-	-	-	1A	-	AP8152290	1	-
16	Washer	-	-	-	2A	-	GU95100244	1	-
17	Spacer	-	-	-	1A	-	GU91120822	1	-
18	Self-locking nut M8*	-	-	-	-	-	AP8152300	1	-
19	Gasket	-	-	-	-	-	AP8144707	2	-

BREVA V IE 1100 2005-2007	GU077	02	TAB N.	35
TAILLIGHT				

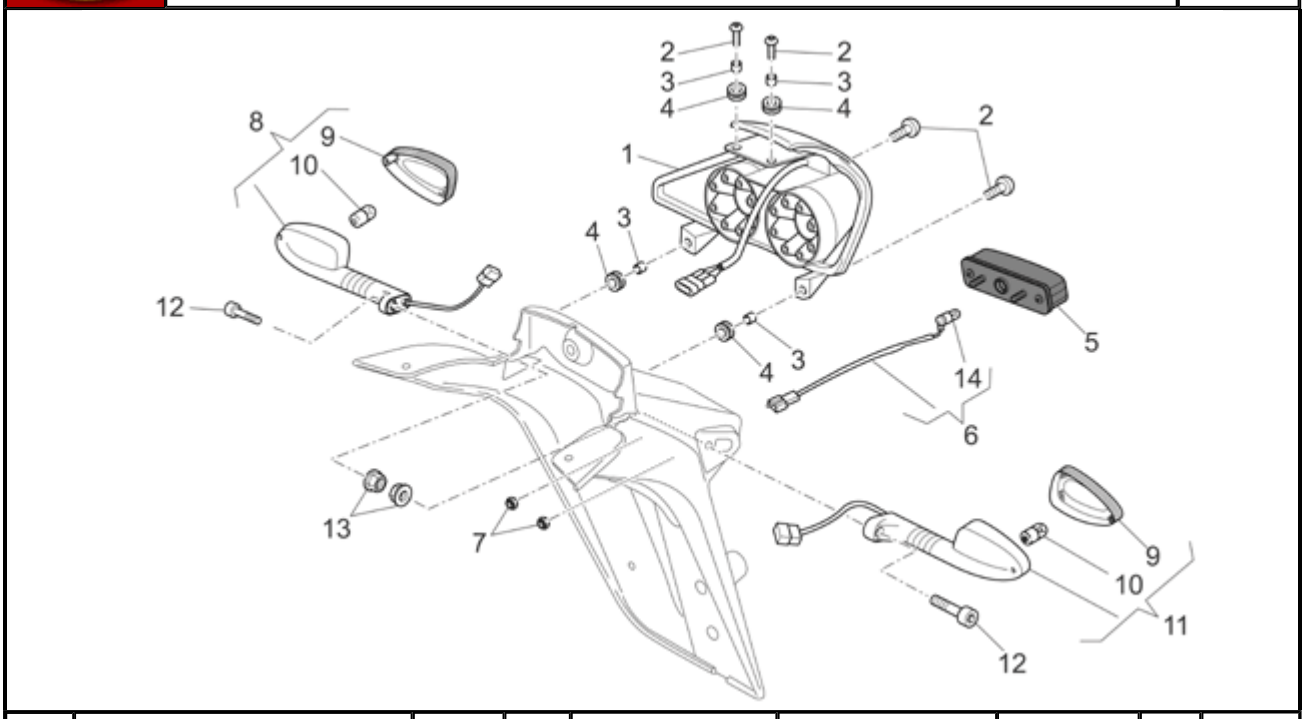

Pos.	Description	Year	I_M_	Country	Version	Code	Q.ty	P.Cod.
1	Taillight	-	-	-	- -	GU05740930	1	CB049
2	Screw w/ flange M5x16	-	-	-	- -	AP8152298	4	-
3	Bush 5,3x8x7,1	-	-	-	- -	AP8221036	4	-
4	Rubber spacer *	-	-	-	- -	AP8120405	4	-
5	Number-plate light	-	-	-	- -	AP8212702	1	CB009
6	Plate light wiring	-	-	-	- -	AP8124976	1	CA179
7	Self-locking nut M5*	-	-	-	- -	AP8152306	2	-
8	Rear RH turn indicator	-	-	-	- -	GU05751630	1	CB09V
9	Turn indicator lens	-	-	-	- -	AP8127552	2	CB01*
10	Lamp, orange 12V-10W	-	-	-	- -	GU93450126	2	-
11	Rear LH turn indicator	-	-	-	- -	GU05751730	1	CB09W
12	Hex socket screw M6x18	-	-	-	- -	GU98692318	2	-
13	Nut M6x1	-	-	-	- -	GU92630206	2	-
14	Lamp 12V-5W	-	-	-	- -	GU93450105	1	-

MOTO GUZZI	BREVA V IE 1100 2005-2007	GU077	02	TAB N.	36
	ELECTRICAL SYSTEM I				

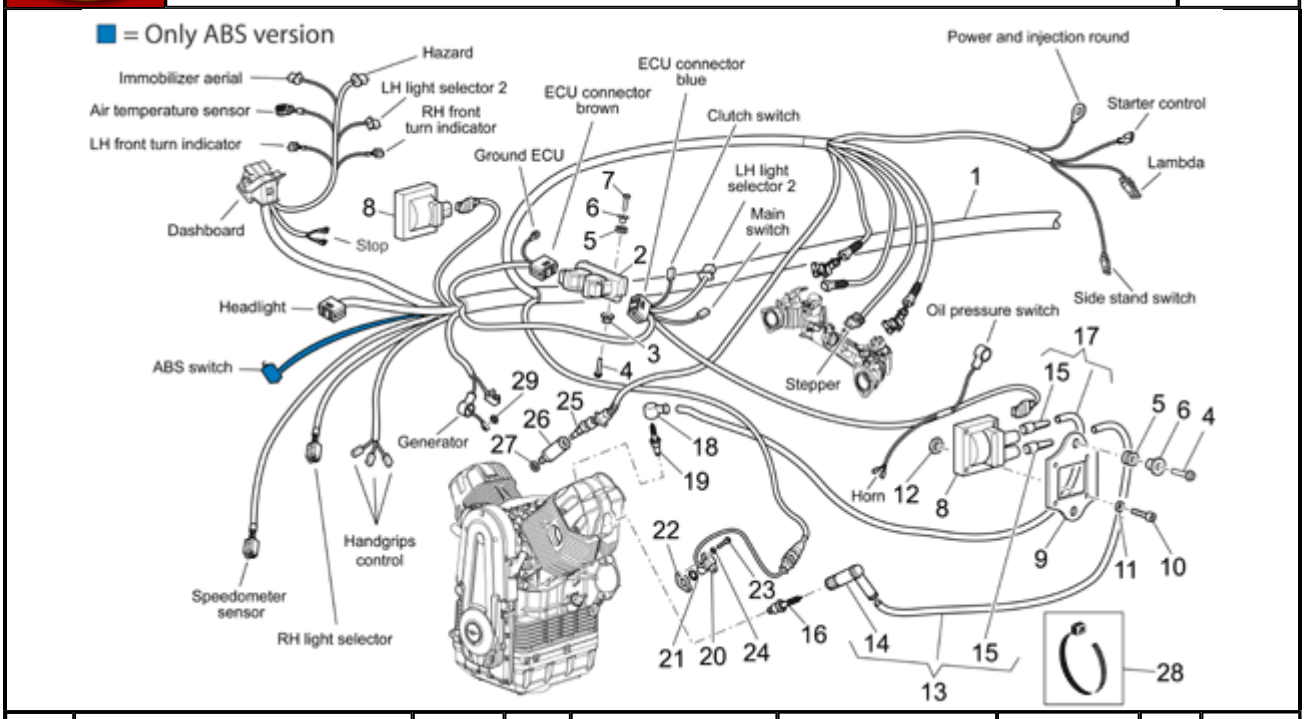

Pos.	Description	Year	I_M_	Country	Version		Code	Q.ty	P.Cod.
1	Main wiring harness	7	-	-	abs	-	978244	1	IC059
	Main wiring harness	5-6	-	-	std	-	GU05747130	1	CA009
	Main wiring harness	5-6	-	-	abs	-	GU05747131	1	IC059
	Main wiring harness	7	-	-	std	-	978223	1	CA009
2	ECU	-	-	-	std	-	GU05729530	1	AM049
	ECU	-	-	-	abs	-	GU05729535	1	IC009
3	Bush	-	-	-	-	-	GU05729230	2	-
4	Screw w/ flange M6x20	-	-	-	-	-	AP8152279	6	-
5	Rubber spacer *	-	-	-	-	-	AP8120030	6	-
6	T bush *	-	-	-	-	-	AP8221023	6	-
7	Screw w/ flange M6x35	-	-	-	-	-	AP8152282	2	-
8	HT coil	-	-	-	-	-	GU05716530	2	AM019
9	Coil holder	-	-	-	-	-	GU05716730	2	BA26E
10	Hex socket screw M4X25	-	-	-	-	-	GU98682125	8	-
11	Washer 4,3x8x0,5	-	-	-	-	-	GU95008204	8	-
12	Nut M4x0,7	-	-	-	-	-	GU92630104	8	-
13	HT wire	-	-	-	-	-	GU05718330	2	CA38E
14	Sparkplug cap	-	-	-	-	-	GU03717450	2	AM02*
15	Cap	-	-	-	-	-	GU14717600	4	-
16	Spark plug NGK BPR6ES	-	-	-	-	-	GU30717061	2	AM03*
17	HT wire	-	-	-	-	-	GU05718331	2	CA38E
18	Sparkplug cap	-	-	-	-	-	GU05717430	2	AM02*
19	Spark plug NGK PNR8B	-	-	-	-	-	GU05717030	2	AM03*
20	Phase/revolution sensor	-	-	-	-	-	GU01721600	1	AN049
21	O-ring	-	-	-	-	-	GU90706141	1	-
22	Gasket 1mm	-	-	-	-	-	GU01722704	1	AO349
	Gasket 1,5mm	-	-	-	-	-	GU01722705	1	AO349
	Gasket 0,8mm	-	-	-	-	-	GU01722703	1	AO349
	Gasket 0,6mm	-	-	-	-	-	GU01722702	1	AO349
	Gasket 0,4mm	-	-	-	-	-	GU01722701	1	AO349
	Gasket 0,3mm	-	-	-	-	-	GU01722700	1	AO349
	Gasket 0,5 mm	-	-	-	-	-	GU29722760	1	AO349
23	Hex socket screw M5x12	-	-	-	-	-	GU98682212	2	-

24	Washer 5,3x10x0,8	-	-	-	-	-	GU95008205	2	-
25	Oil temperature sensor	-	-	-	-	-	GU29729461	1	AN099
26	Sensor support	-	-	-	-	-	GU03163330	1	-
27	Washer 10,2X18X2	-	-	-	-	-	GU95008210	1	-
28	Hose clamp 3,6x20,6	-	-	-	-	-	GU14609650	23	-
	Hose clamp 8,8x185	-	-	-	-	-	GU30609600	1	-
	Hose clamp 7,6x380	-	-	-	-	-	GU93304360	2	-
29	Self-locking nut M6*	-	-	-	-	-	AP8152299	1	-

MOTO GUZZI	BREVA V IE 1100 2005-2007	GU077	02	TAB N.	37

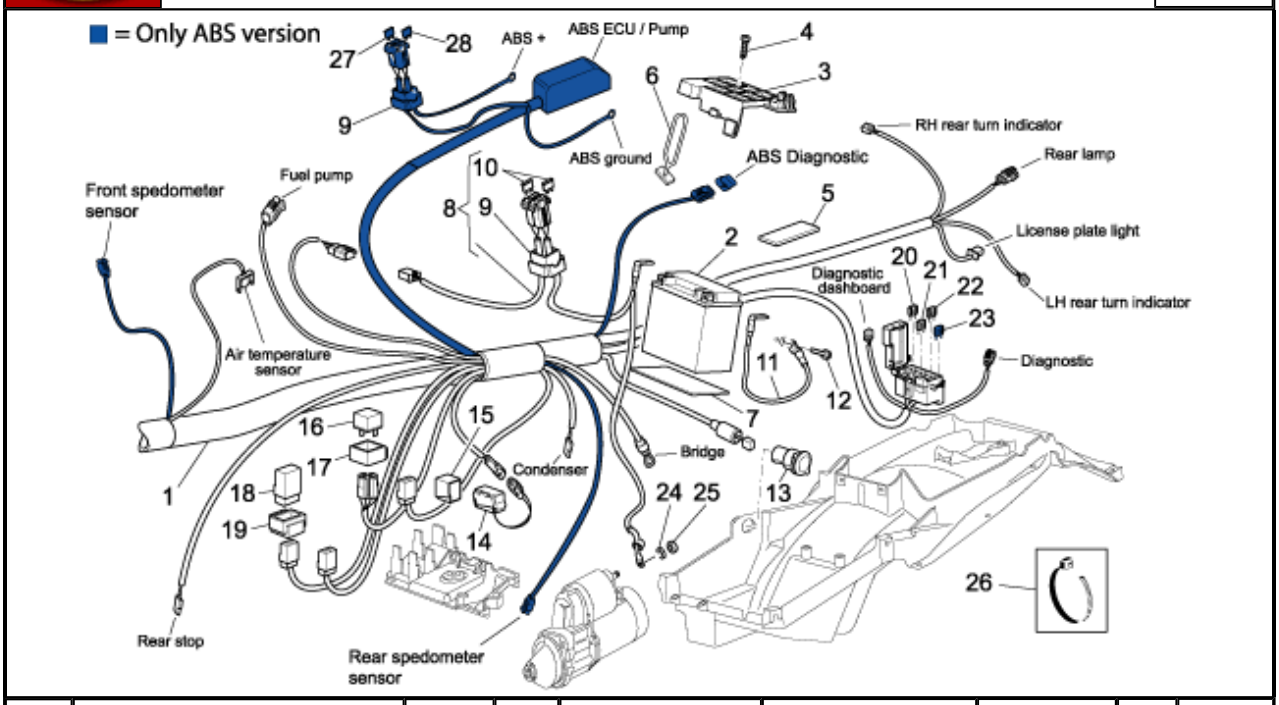

Pos.	Description	Year	I_M_	Country	Version		Code	Q.ty	P.Cod.
1	Main wiring harness	7	-	-	abs	-	978244	1	CA009
	Main wiring harness	5-6	-	-	std	-	GU05747130	1	IC059
	Main wiring harness	5-6	-	-	abs	-	GU05747131	1	IC059
	Main wiring harness	7	-	-	std	-	978223	1	CA009
2	Battery 12V-20Ah	-	-	-	-	-	GU05704531	1	CC009
3	Battery cover	-	-	-	-	-	GU05704630	1	DC259
4	Phillips screw, SWP M5X20	-	-	-	-	-	AP8152329	2	-
5	Adhesive sponge	-	-	-	-	-	AP8117200	1	-
6	Headlight supp.snap	-	-	-	-	-	AP8120177	2	-
7	Support rubber part	-	-	-	-	-	AP8144553	2	CA079
8	Wiring	-	-	-	-	-	GU05747830	1	-
9	Rubber fuse box	-	-	-	std	-	AP8112811	1	-
	Rubber fuse box	-	-	-	abs	-	AP8112811	2	CA349
10	Fuse 30A	-	-	-	-	-	GU28742562	3	CA039
11	Ground-battery lead	-	-	-	-	-	GU05747930	1	-
12	Screw w/ flange M6x12*	-	-	-	-	-	AP8152277	1	CA399
13	Socket	-	-	-	-	-	AP8124768	1	CA369
14	Inclination sensor	-	-	-	-	-	AP8124266	1	-
15	Rubber sensor support	-	-	-	-	-	AP8144046	1	CD189
16	Injection relay	-	-	-	-	-	AP8124869	1	-
17	Relay rubber	-	-	-	-	-	AP8220546	1	CD029
18	Relay 12V/30A	-	-	-	-	-	AP8224462	3	-
19	Rubber spacer *	-	-	-	-	-	AP8220283	3	CA349
20	Fuse 20A	-	-	-	-	-	977773	2	CA349
21	Fuse 15A	-	-	-	-	-	977772	4	CA349
22	Fuse 3A	-	-	-	-	-	977769	2	CA349
23	Fuse 10A	-	-	-	abs	-	977771	1	-
24	Washer 8,4x15x1,7	-	-	-	-	-	GU95129131	1	-
25	Nut M8x1,25	-	-	-	-	-	GU92609408	1	-
26	Hose clamp 3,6x20,6	-	-	-	-	-	GU14609650	23	-
	Hose clamp 8,8x185	-	-	-	-	-	GU30609600	1	CA349
	Hose clamp 7,6x380	-	-	-	-	-	GU93304360	2	-
27	Fuse ABS-25A	-	-	-	abs	-	977761	2	CA349
28	Fuse ABS-40A	-	-	-	abs	-	977762	2	DH009

BREVA V IE 1100 2005-2007	GU077	02	TAB N.	38
LOCK HARDWARE KIT				

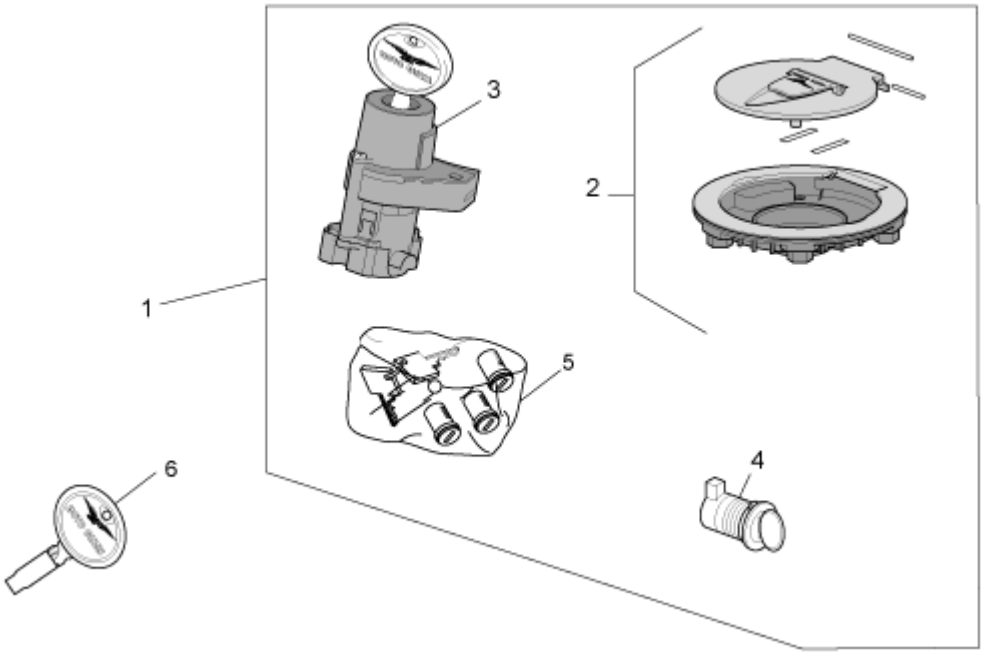

Pos.	Description	Year	I_M_	Country	Version	Code	Q.ty	P.Cod.
1	Lock hardware kit	5-6	-	-	- -	GU05736830	1	DA029
	Lock hardware kit	7	-	-	- -	977666	1	DH009
2	Tank cap	-	-	-	- -	GU05103930	1	DH029
3	Main switch - steering lock	-	-	-	- -	GU05782530	1	DH039
4	Saddle lock	-	-	-	- -	GU05466830	1	DH099
5	Rotor kit with key	7	-	-	- -	978220	1	-
6	Non indented key blank	-	-	-	- -	GU05735530	1	DH099

BREVA V IE 1100 2005-2007	GU077	02	TAB N.	39
PLATE SET-DECAL-OP.HANDBOOKS				

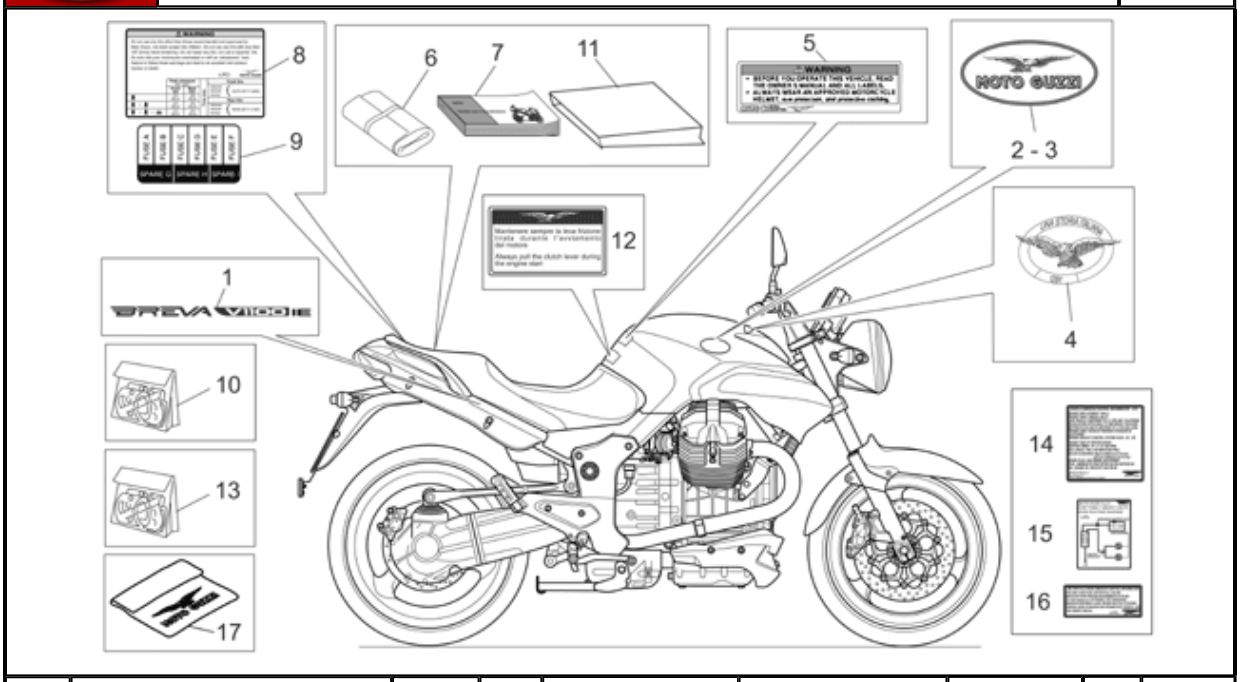

Pos.	Description	Year	I_M_	Country	Version		Code	Q.ty	P.Cod.
1	Decal "Breva V 1100 I.E."	-	-	-	-	g/bl	GU05923431	2	DI109
	Decal "Breva V 1100 I.E."	-	-	-	-	d/wh-or-r/re-s/gr	GU05923430	2	DI109
2	LH Name plate,red/gold AL	-	-	-	2A	-	GU06917400	1	DI079
	LH Name plate,black/red AL	-	-	-	1A	g/bl-s/gr	GU32917410	1	DI079
	LH Name plate red/grey AL	-	-	-	1A	r/re	GU32917412	1	DI079
3	RH Name plate red/grey AL	-	-	-	1A	r/re	GU32917312	1	DI079
	RH Name plate,red/gold AL	-	-	-	2A	-	GU06917300	1	DI079
	RH Name plate,black/red AL	-	-	-	1A	g/bl-s/gr	GU32917310	1	DI079
4	Decal "Italian Story"	-	-	-	-	-	GU05917530	1	DI079
5	Decal "Attention"	-	-	-	-	-	GU30944300	1	DI079
6	Toolkit	-	-	-	-	-	GU05909930	1	DG099
7	Operator's handbook	-	-	AUS-EU-J-UK	std	-	GU05900030	1	DG109
	Operator's handbook I-F-D-NL-E-UK	6	-	AUS-EU-J-UK	-	-	977472	1	DG109
	Operator's handbook	6	-	CA-USA	-	-	977473	1	DG109
	Operator's handbook I-F-D-NL-E-UK	7	-	AUS-EU-J-UK	-	-	978247	1	DG109
	Operator's handbook	7	-	CA-USA	-	-	978248	1	DG109
	Operator's handbook	6	-	USA	std	-	GU05900031	1	DG109
8	Tyre pressure decal	-	-	-	-	-	GU05926030	1	DI049
9	Sticker "schema fusibili"	-	-	-	-	-	GU05945030	1	DI049
10	Decal set	-	-	-	-	d/wh-or	977763	1	DI009
	Decal set	-	-	-	2A	r/re-s/gr	977763	1	DI009
	Decal set	-	-	-	1A	r/re	GU05923331	1	DI009
	Decal set	-	-	-	-	g/bl	GU05923332	1	DI009
	Decal set	-	-	-	1A	s/gr	GU05923333	1	DI009
11	Bag for document	-	-	-	-	-	GU05900130	1	-
12	Decal Engine Start	-	-	-	-	-	GU05944930	1	DI049
13	Technical decal set	-	-	CA-USA	-	-	GU05923330	1	-
14	Emission control sticker	7	-	CA-USA	T2	-	977579	1	-
	Emission control sticker	6	-	USA	T1	-	GU05943930	1	-
15	Carbon filter sticker	7	-	CA-USA	T2	-	977577	1	-
	Carbon filter sticker	6	-	USA	T1	-	GU05944030	1	-
16	Noise emission sticker	7	-	CA-USA	T2	-	977578	1	-
	Noise emission sticker	6	-	USA	T1	-	GU05997630	1	-
17	Bike cover	-	-	-	-	-	GU30970200	1	-

MOTO GUZZI	BREVA V IE 1100 2005-2007	GU077	02	TAB N.	40
	CRANK-CASE				

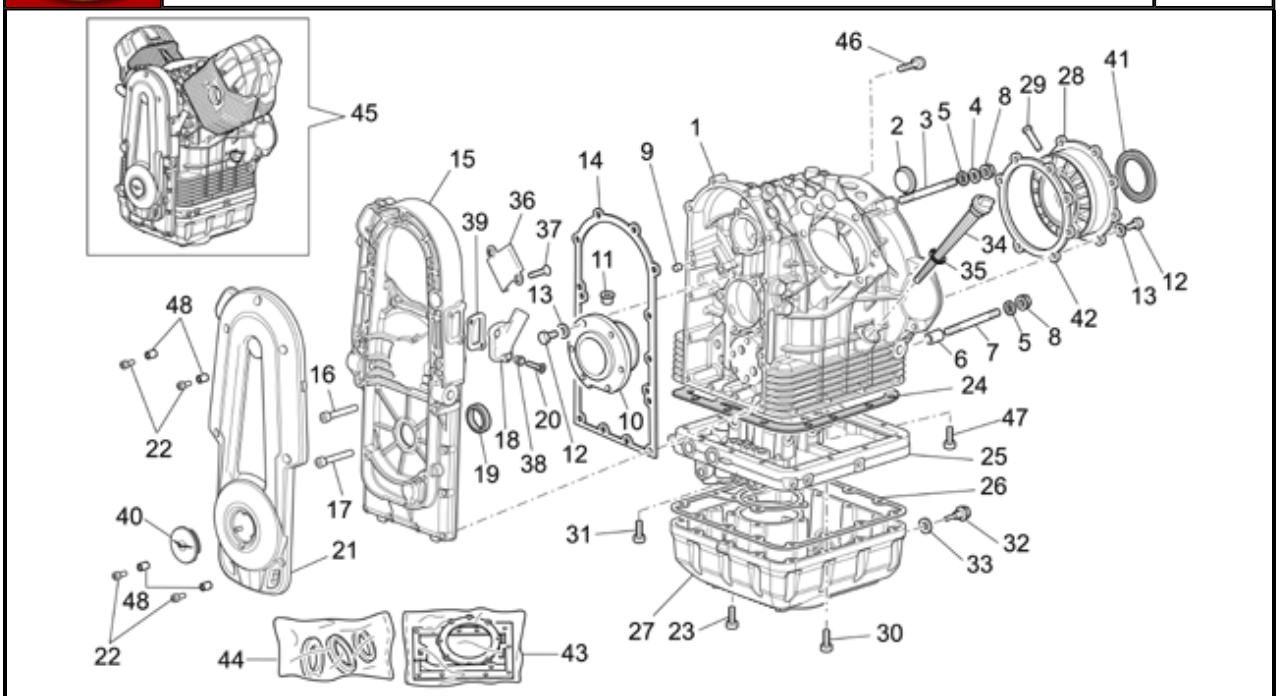

Pos.	Description	Year	I_M_	Country	Version		Code	Q.ty	P.Cod.
1	Crankcase black	-	-	-	M9	-	GU05000730	1	AH009
	Crankcase black	-	-	-	M10	-	976041	1	AH009
2	Disc	-	-	-	-	-	GU12003900	1	-
3	Stud bolt M8X66	-	-	-	-	-	GU96508066	3	AH199
4	Washer 8,4X15X1,5	-	-	-	-	-	GU95008208	2	-
5	Washer 8,4X13X0,8	-	-	-	-	-	GU14615901	5	-
6	Coupling bush	-	-	-	-	-	GU12018900	2	-
7	Stud bolt M8x75	-	-	-	-	-	GU96508075	2	AH199
8	Flanged nut M8	-	-	-	-	-	GU92660021	5	-
9	Pin	-	-	-	-	-	GU95512081	2	-
10	Complete flange	-	-	-	-	-	GU14011900	1	AI009
	Flange min.0,2 mm	-	-	-	-	-	GU14011901	1	AI009
11	Pin	-	-	-	-	-	GU12012200	1	-
12	Hex screw M8x25	-	-	-	-	-	GU98084425	14	-
13	Spring washer 8x15x0,3	-	-	-	-	-	GU61270300	14	-
14	Cover gasket	-	-	-	-	-	GU05001231	1	AO449
15	Timing cover black	-	-	-	-	-	GU05001430	1	AH359
16	Hex socket screw M8x55	-	-	-	-	-	AP8150046	4	-
17	Hex socket screw M6X30	-	-	-	-	-	GU98682330	10	-
18	Union	-	-	-	-	-	GU05007230	1	-
19	Gasket ring 22x35x7viton	-	-	-	-	-	GU90412237	1	AO15E
20	Hex socket screw M6x20	-	-	-	-	-	GU98682320	2	-
21	Alternator cover grey	-	-	-	-	-	GU05001630	1	AH039
22	Hex socket screw M6x16	-	-	-	-	-	GU98682316	4	-
23	Hex socket screw M6X30	-	-	-	-	-	GU98682330	4	-
24	Gasket	-	-	-	-	-	GU01003651	1	AO329
25	Flange black	-	-	-	-	-	GU05003130	1	AH369
26	Gasket	-	-	-	-	-	GU05003630	1	AO459
27	Oil sump black	-	-	-	-	-	GU05003530	1	AH269
28	Complete flange	-	-	-	-	-	GU12011400	1	AI009
	Flange min.0,2 mm	-	-	-	-	-	GU12011401	1	AI009
	Flange min.0,4 mm	-	-	-	-	-	GU12011402	1	AI009
	Flange min.0,6 mm	-	-	-	-	-	GU12011403	1	AI009
29	Pin	-	-	-	-	-	GU12011700	1	-

30	Hex socket screw m6x55	-	-	-	-	-	AP4ADN000007	14	-
31	Hex socket screw M6x60	-	-	-	-	-	GU98680360	2	-
32	Oil unload plug M10X1	-	-	-	-	-	GU31003766	1	AH109
33	Gasket 10x18x1,5	-	-	-	-	-	GU01528930	1	-
34	Oil level plug	-	-	-	-	-	GU05004930	1	AH119
35	O-ring 17,86X2,62	-	-	-	-	-	GU90706178	1	-
36	Plate	-	-	-	-	-	GU05007330	1	-
37	Screw TSPEI M4x8	-	-	-	-	-	GU98257408	2	-
38	Bush 6,4x8,4x10,5	-	-	-	-	-	GU91120607	2	-
39	O-ring 34,65x1,78viton	-	-	-	-	-	GU90706347	1	-
40	Plug	-	-	-	-	-	GU05002130	1	-
41	Gasket ring	-	-	-	-	-	GU90405367	1	AO15F
42	Gasket	-	-	-	-	-	GU05011830	1	AO429
43	Engine set gasket	-	-	-	-	-	GU05999030	1	AO***
44	Engine oil seal kit/Gear box	-	-	-	-	-	GU05999530	1	AO***
45	Engine cpl.	-	-	-	-	-	GU05991030	1	A9989
46	Screw w/ flange M8x45*	-	-	-	-	-	AP8152291	1	-
47	Hex socket screw M6X40	-	-	-	-	-	GU98680340	2	-
48	Bush 6,8x8,8x5,8	-	-	-	-	-	GU91120606	4	-

BREVA V IE 1100 2005-2007	GU077	02	TAB N.	41
CYLINDER HEAD AND VALVES I				

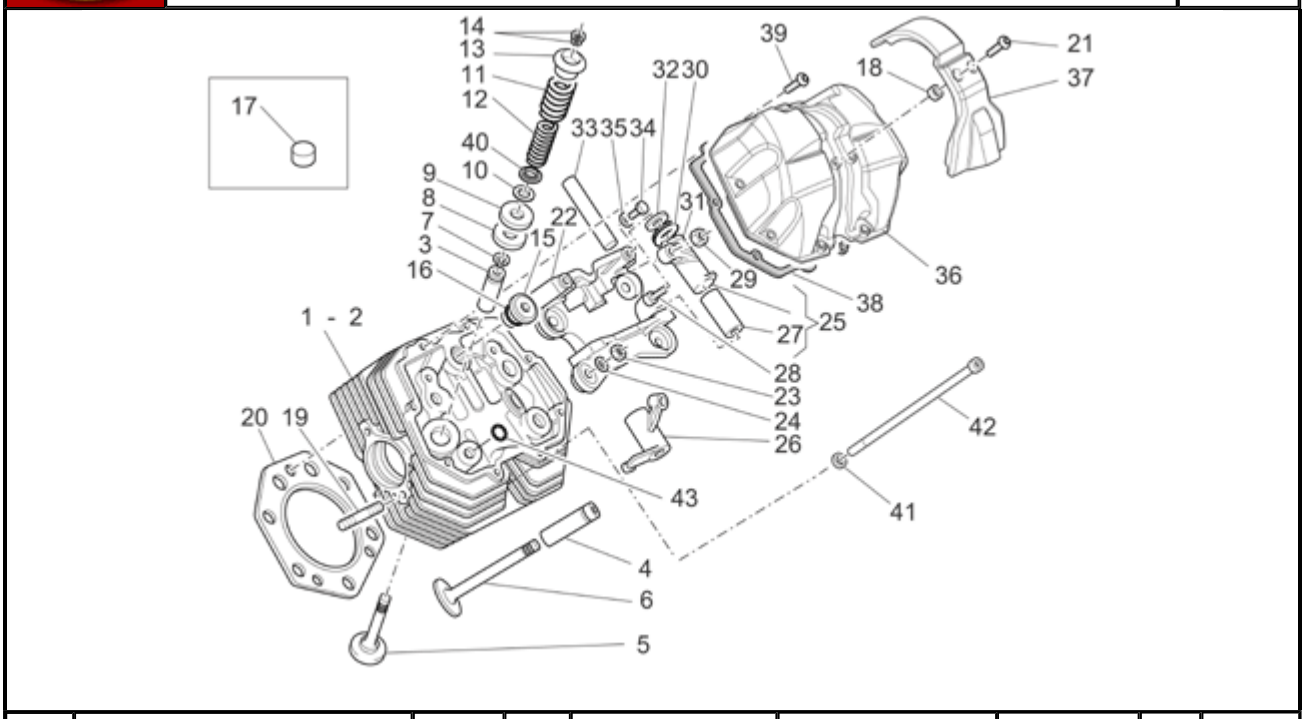

Pos.	Description	Year	I_M_	Country	Version		Code	Q.ty	P.Cod.
1	RH head assy w/h valve grey	-	-	-	M8-M9	-	GU05022132	1	AA00A
	RH head assy w/h valve	-	-	-	M7	-	GU05022130	1	AA00A
2	LH head assy with valve	-	-	-	M7	-	GU05022230	1	AA00B
	LH head assy with valve grey	-	-	-	M8-M9	-	GU05022232	1	AA00B
3	Exhaust valve guide	-	-	-	M7	-	GU13036801	2	AA14O
4	Intake valve guide	-	-	-	M7	-	GU14036860	2	AA14N
5	Exhaust valve	-	-	-	-	-	GU05036131	2	AA01O
6	Intake valve	-	-	-	-	-	GU05036030	2	AA01N
7	Snap ring	-	-	-	-	-	GU90353016	4	-
8	Washer 14,2x31x1	-	-	-	-	-	GU13037200	4	-
9	Washer 14,2x31x0,3	-	-	-	-	-	GU14037300	10	-
10	Washer plate	-	-	-	-	-	GU01038730	4	-
11	Outer spring	-	-	-	-	-	GU37037405	4	AA02*
12	Inner spring	-	-	-	-	-	GU37037605	4	AA02*
13	Upper cup	-	-	-	-	-	GU01038060	4	AA129
14	Valve half-cone	-	-	-	-	-	GU01038160	8	AA03*
15	Oil plug	-	-	-	-	-	GU12022600	2	-
16	O-ring 20,24X2,62	-	-	-	-	-	GU90706203	2	-
17	Rubber spacer	-	-	-	-	-	GU05025331	18	-
18	Bush 6,8x8,8x9,8	-	-	-	-	-	GU32116810	4	-
19	Stud bolt	-	-	-	-	-	GU96508040	4	AA15*
20	Gasket	-	-	-	M9	-	GU03022055	2	AO00*
21	Screw w/ flange M5x16	-	-	-	-	-	AP8152298	4	-
22	Rocker arm support	-	-	-	M9	-	GU14034865	2	AC38*
23	Nut M10X1,5	-	-	-	-	-	GU92603010	8	-
24	Washer 10,5X21X1	-	-	-	-	-	GU14018400	8	-
25	RH rocker arm assy	-	-	-	-	-	GU14030201	2	AC08*
26	LH rocker arm assy	-	-	-	-	-	GU14030401	2	AC08*
27	Bush 15x18x43	-	-	-	-	-	GU91111511	4	AC069
28	Adjuster screw	-	-	-	-	-	GU17034050	4	AC099
29	Nut	-	-	-	-	-	GU10034100	4	-
30	Spring	-	-	-	-	-	GU94322215	4	-
31	Washer 15,2x26x1	-	-	-	-	-	GU90118152	8	-

32	Washer 15,2x26x0,5	-	-	-	-	-	GU10032700	4	-
33	Rocker shaft	-	-	-	-	-	GU12031800	4	AC069
34	Hex screw M6X16	-	-	-	-	-	GU98084316	4	-
35	Washer 6,5x11x2	-	-	-	-	-	GU95120065	4	-
36	Head cover brown	-	-	-	-	-	GU05023530	2	AH07*
37	Insert	-	-	-	-	-	GU05023430	2	AH07*
38	Cover gasket	-	-	-	-	-	976139	2	AO14*
39	Screw M6x25	-	-	-	-	-	GU05025930	16	-
40	Lower cup 14,2x32x5	-	-	-	-	-	GU01037030	4	AA129
41	Washer 10,5X18X0,8	-	-	-	-	-	GU95129180	4	-
42	Screw	-	-	-	M6	-	976144	4	-
	Screw	-	-	-	M5	-	GU05021831	4	-
43	O-ring 9x2	-	-	-	M9	-	GU90706094	8	-

BREVA V IE 1100 2005-2007	GU077	02	TAB N.	42
CYLINDER HEAD AND VALVES II				

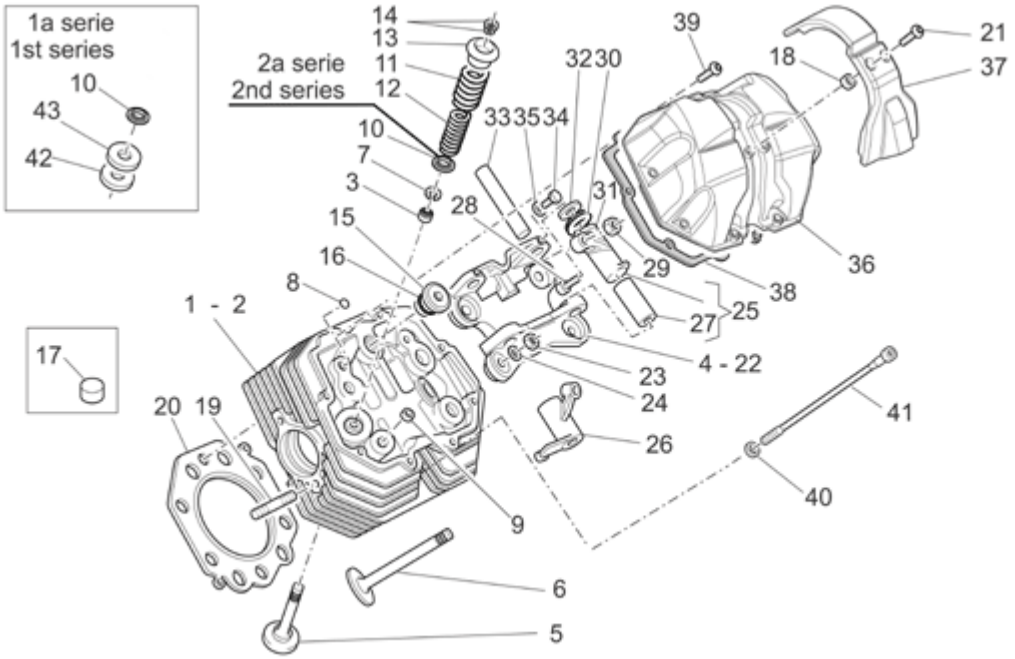

Pos.	Description	Year	I_M_	Country	Version		Code	Q.ty	P.Cod.
1	RH head assy w/h valve grey	-	-	-	M10	-	976079	1	AA00A
2	LH head assy with valve grey	-	-	-	M10	-	976080	1	AA00B
3	Valve stem seal D8	-	-	-	M10	-	976107	4	AO20*
4	RH.Rocker arm support	-	-	-	M10	-	976152	1	AC38A
5	Exhaust valve	-	-	-	-	-	GU05036131	2	AA01O
6	Intake valve	-	-	-	-	-	GU05036030	2	AA01N
7	Snap ring	-	-	-	-	-	GU90353016	4	-
8	O-ring 8,73x1,78-viton	-	-	-	M10	-	224202	4	-
9	Pin 11,8X10	-	-	-	M10	-	825597	4	-
10	Lower cup 14,2x32x5	-	-	-	1A	-	GU01037030	4	AA129
	Lower cup 14,2x32x7	-	-	-	2A	-	976181	4	AA129
11	Outer spring	-	-	-	-	-	GU37037405	4	AA02*
12	Inner spring	-	-	-	-	-	GU37037605	4	AA02*
13	Upper cup	-	-	-	-	-	GU01038060	4	AA129
14	Valve half-cone	-	-	-	-	-	GU01038160	8	AA03*
15	Oil plug	-	-	-	-	-	GU12022600	2	-
16	O-ring 20,24X2,62	-	-	-	-	-	GU90706203	2	-
17	Rubber spacer	-	-	-	-	-	GU05025331	18	-
18	Bush 6,8x8,8x9,8	-	-	-	-	-	GU32116810	4	-
19	Stud bolt	-	-	-	-	-	GU96508040	4	AA15*
20	Gasket	-	-	-	M10	-	976087	2	AO00*
21	Screw w/ flange M5x16	-	-	-	-	-	AP8152298	4	-
22	LH.Rocker arm support	-	-	-	M10	-	976153	1	AC38B
23	Nut M10X1,5	-	-	-	-	-	GU92603010	8	-
24	Washer 10,5X21X1	-	-	-	-	-	GU14018400	8	-
25	RH rocker arm assy	-	-	-	-	-	GU14030201	2	AC08*
26	LH rocker arm assy	-	-	-	-	-	GU14030401	2	AC08*
27	Bush 15x18x43	-	-	-	-	-	GU91111511	4	AC069
28	Adjuster screw	-	-	-	-	-	GU17034050	4	AC099
29	Nut	-	-	-	-	-	GU10034100	4	-
30	Spring	-	-	-	-	-	GU94322215	4	-
31	Washer 15,2x26x1	-	-	-	-	-	GU90118152	8	-
32	Washer 15,2x26x0,5	-	-	-	-	-	GU10032700	4	-

33	Rocker shaft	-	-	-	-	-	GU12031800	4	AC069
34	Hex screw M6X16	-	-	-	-	-	GU98084316	4	-
35	Washer 6,5x11x2	-	-	-	-	-	GU95120065	4	-
36	Head cover brown	-	-	-	-	-	GU05023530	2	AH07*
37	Insert	-	-	-	-	-	GU05023430	2	AH07*
38	Cover gasket	-	-	-	-	-	976139	2	AO14*
39	Screw M6x25	-	-	-	-	-	GU05025930	16	-
40	Washer 10,5X18X0,8	-	-	-	-	-	GU95129180	4	-
41	Screw	-	-	-	-	-	976144	4	-
42	Washer 14,2x31x1	-	-	-	1A	-	GU13037200	4	-
43	Washer 14,2x31x0,3	-	-	-	1A	-	GU14037300	10	-

BREVA V IE 1100 2005-2007	GU077	02	TAB N.	43
CRANKSHAFT CPL.				

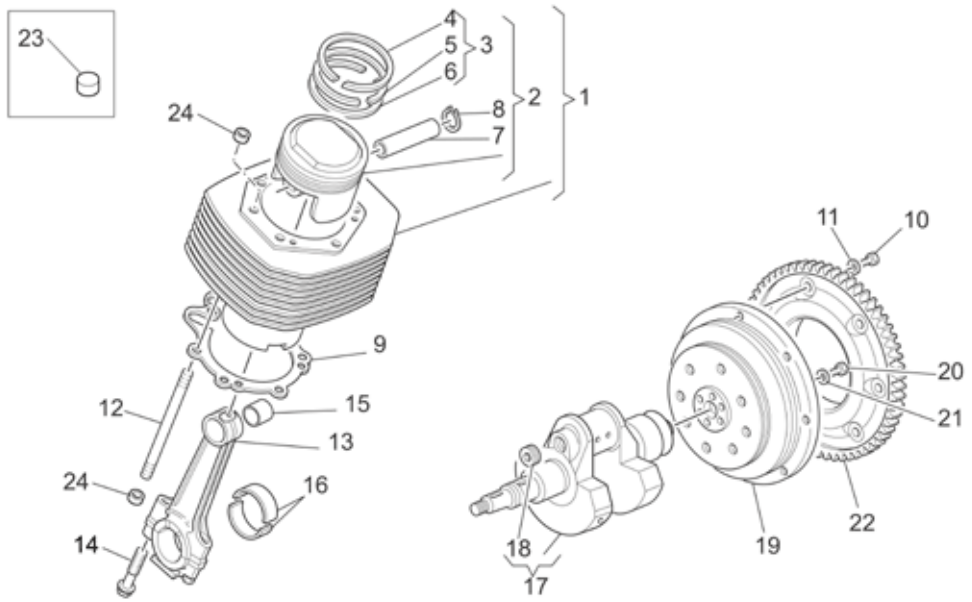

Pos.	Description	Year	I_M_	Country	Version		Code	Q.ty	P.Cod.
1	Cylinder with piston	-	-	-	M9	-	GU05060130	2	AB00*
	Cylinder with piston	-	-	-	M10	-	976196	2	AB00*
2	Piston assy	-	-	-	-	-	GU05060230	2	AB01*
3	Pistonring set	-	-	-	-	-	GU05060630	2	AB02*
4	Piston ring	-	-	-	-	-	GU05060730	2	AB02*
5	Piston ring	-	-	-	-	-	GU05060930	2	AB02*
6	Piston ring	-	-	-	-	-	GU05061030	2	AB02*
7	Piston pin	-	-	-	-	-	GU30061241	2	AD02*
8	Stop ring	-	-	-	-	-	GU90351039	4	AD03*
9	Gasket	-	-	-	M9	-	GU05020830	2	AO01*
	Gasket	-	-	-	M10	-	976064	2	AO01*
10	Screw TCEI M6x12	-	-	-	-	-	GU37067705	8	-
11	Washer 6,4x10x0,7	-	-	-	-	-	GU14217901	8	-
12	Stud bolt	-	-	-	M6	-	976031	8	AB04*
	Stud bolt	-	-	-	M5	-	GU12021700	8	AB04*
13	Connecting rod cpl.	-	-	-	M11	-	GU05061530	2	AD01*
	Connecting rod cpl.	-	-	-	M12	-	976003	2	AD01*
14	Connecting rod screw	-	-	-	M12	-	849131	4	-
	Connecting rod screw	-	-	-	M11	-	GU01062230	4	-
15	Bush	-	-	-	M11	-	GU91112128	2	AI01*
16	Bearing half-shell min.0,762	-	-	-	M11	-	GU01062033	4	AI109
	Bearing half-shell 1,535-1,540	-	-	-	M12-RS	-	976171	4	AI109
	Bearing half-shell 1,539-1,544	-	-	-	BS-M12	-	976172	4	AI109
	Bearing half-shell	-	-	-	M11	-	GU01062030	4	AI109
	Bearing half-shell min.0,254	-	-	-	M11	-	GU01062031	4	AI109
	Bearing half-shell min.0,508	-	-	-	M11	-	GU01062032	4	AI109
17	Crankshaft cpl.	-	-	-	M11	-	976117	1	AD009
	Crankshaft cpl.	-	-	-	M12	-	976186	1	AD009
18	Plug	-	-	-	-	-	GU37065405	1	-
19	Flywheel cpl.	-	-	-	-	-	GU04067000	1	AM009
20	Screw M8X25	-	-	-	-	-	GU12067701	6	-
21	Washer 8,4X13X0,8	-	-	-	-	-	GU14615901	6	-
22	Chain ring	-	-	-	-	-	GU01067930	1	AK019
23	Rubber spacer	-	-	-	-	-	GU05025330	54	-
24	Pin 11,8X10	-	-	-	M10	-	825597	6	-

BREVA V IE 1100 2005-2007	GU077	02	TAB N.	44
TIMING SYSTEM				

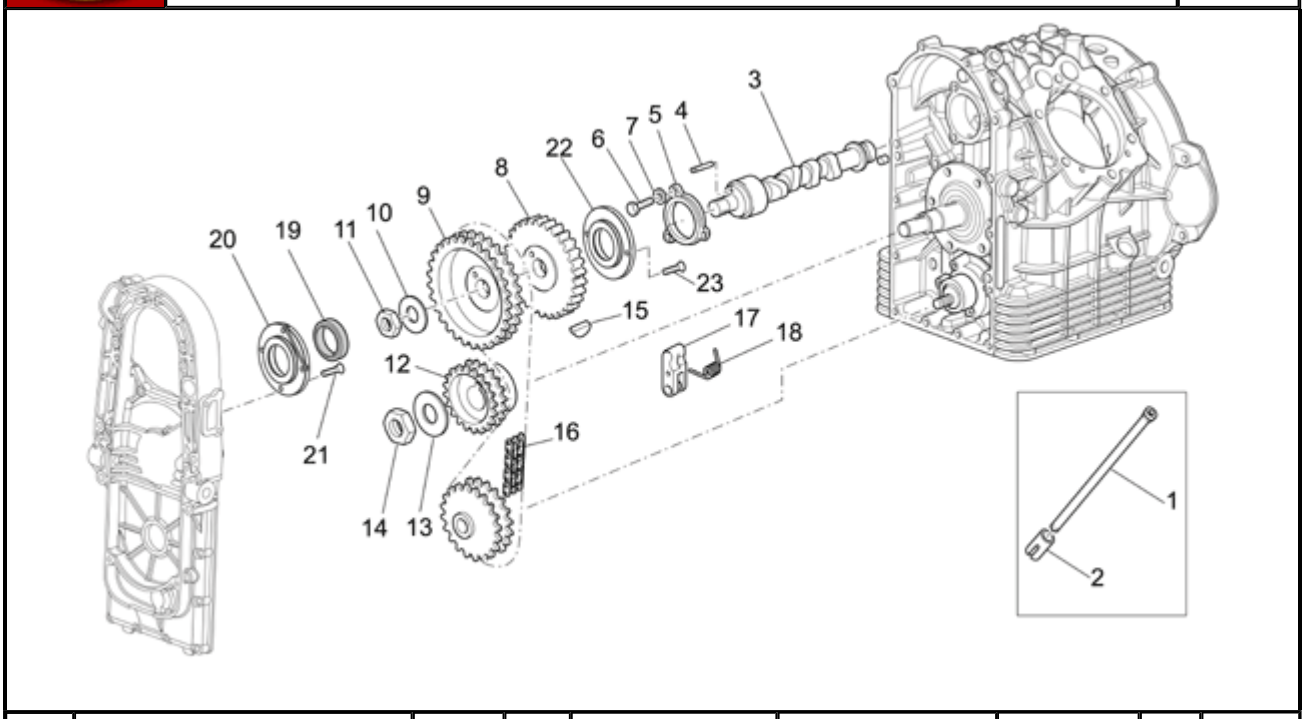

Pos.	Description	Year	I_M_	Country	Version		Code	Q.ty	P.Cod.
1	Rocker arm rod	-	-	-	-	-	GU37045006	4	AC319
2	Tappet	-	-	-	-	-	GU17045860	4	AC309
3	Camshaft	-	-	-	-	-	GU05053331	1	AC059
4	Pin	-	-	-	-	-	GU14234600	1	-
5	Flange	-	-	-	-	-	GU01054001	1	AC349
6	Hex screw M6x20	-	-	-	-	-	GU98084320	3	-
7	Washer 6,5x11x2	-	-	-	-	-	GU95120065	3	-
8	Wheel speed sensor, left front	-	-	-	M1	-	GU01051730	1	AC379
	Wheel speed sensor, left front	-	-	-	M4	-	GU01051730	1	AC379
	Wheel speed sensor, left front	-	-	-	M3	-	GU05051730	1	AC379
	Wheel speed sensor, left front	-	-	-	M2	-	GU05051730	1	AC379
9	Timing system gear	-	-	-	M4	-	GU05054532	1	AC139
	Timing system gear	-	-	-	M1	-	GU05054530	1	AC139
	Timing system gear	-	-	-	M3	-	GU05054531	1	AC139
	Timing system gear	-	-	-	M2	-	GU05054531	1	AC139
10	Spring washer 19x34x1,5	-	-	-	-	-	GU14433400	1	-
11	Nut M18	-	-	-	-	-	GU92750180	1	-
12	Pinion	-	-	-	-	-	GU14072001	1	AC339
13	Washer 25,5x35x2	-	-	-	-	-	GU95100837	1	-
14	Nut M25	-	-	-	-	-	GU92602525	1	-
15	Transmission key 3x6,5	-	-	-	-	-	GU91600365	1	AD099
16	Chain	-	-	-	-	-	GU05058030	1	AC149
17	Chain guide plate	-	-	-	-	-	GU30058310	1	AC279
18	Spring	-	-	-	-	-	GU30059211	1	AC279
19	Gasket ring 15x32x7viton	-	-	-	-	-	GU90401532	1	AO409
20	Support	-	-	-	-	-	GU05055230	1	-
21	Hex socket screw M4x10	-	-	-	-	-	AP8152043	4	-
22	Centrifugal disc	-	-	-	M2-M3	-	GU05053530	1	-
23	Screw M6x12	-	-	-	M2-M3	-	GU98250612	2	-

BREVA V IE 1100 2005-2007	GU077	02	TAB N.	45
OIL PUMP I				

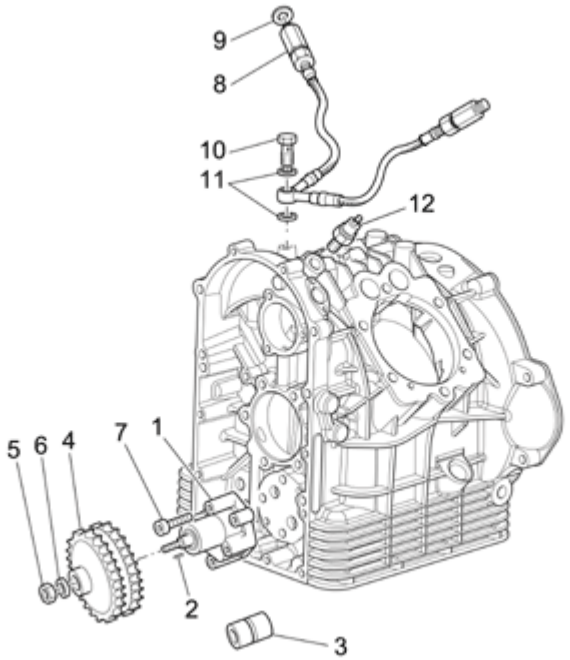

Pos.	Description	Year	I_M_	Country	Version		Code	Q.ty	P.Cod.
1	Oil pump	-	-	-	M9	-	GU30146400	1	AJ059
2	Transmission key	-	-	-	-	-	GU13148300	1	-
3	Roller bearing 10x22x20	-	-	-	M9	-	GU92252210	1	AI319
4	Oil pump gear	-	-	-	-	-	GU30147700	1	AJ079
5	Nut	-	-	-	M9	-	GU92602308	1	-
6	Spring washer	-	-	-	M9	-	GU95120085	1	-
7	Hex socket screw M8x30	-	-	-	M9	-	GU98682430	4	-
8	Pipe	-	-	-	-	-	GU05153630	1	AJ319
9	Gasket	-	-	-	-	-	GU25656102	2	-
10	Screw	-	-	-	-	-	GU95990037	1	-
11	Gasket 8,25x15x1	-	-	-	-	-	GU12154200	2	-
12	Pressure sensor	-	-	-	-	-	GU31768780	1	AN039

BREVA V IE 1100 2005-2007	GU077	02	TAB N.	46
OIL PUMP II				

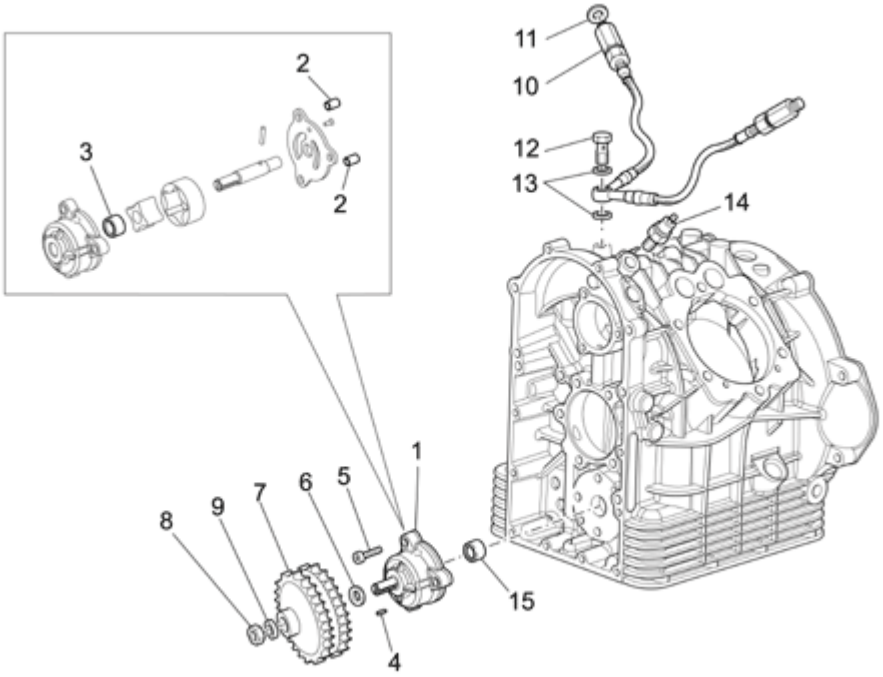

Pos.	Description	Year	I_M_	Country	Version		Code	Q.ty	P.Cod.
1	Oil pump	-	-	-	M10	-	976134	1	AJ059
2	Locating dowel	-	-	-	M10	-	277916	2	-
3	Needle bearing 12x18x12	-	-	-	M10	-	976165	1	AI319
4	Transmission key	-	-	-	-	-	GU13148300	1	-
5	Hex socket screw M6x30	-	-	-	M10	-	GU98350330	3	-
6	Fifth wheel	-	-	-	M10	-	976448	1	-
7	Oil pump gear	-	-	-	-	-	GU30147700	1	AJ079
8	Nut M10x1,25	-	-	-	M10	-	GU92602510	1	-
9	Washer 10,5x16x1	-	-	-	M10	-	GU19149800	1	-
10	Pipe	-	-	-	-	-	GU05153630	1	AJ319
11	Gasket	-	-	-	-	-	GU25656102	2	-
12	Screw	-	-	-	-	-	GU95990037	1	-
13	Gasket 8,25x15x1	-	-	-	-	-	GU12154200	2	-
14	Pressure sensor	-	-	-	-	-	GU31768780	1	AN039
15	Needle bearing 10x14x12	-	-	-	M10	-	976168	1	AI319

BREVA V IE 1100 2005-2007	GU077	02	TAB N.	47
OIL FILTERS				

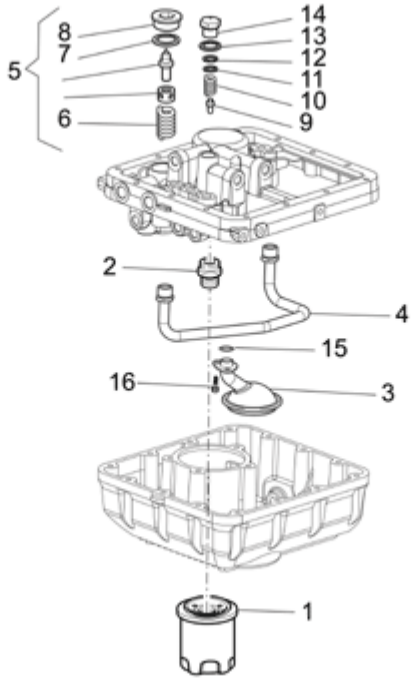

Pos.	Description	Year	I_M_	Country	Version	Code	Q.ty	P.Cod.
1	Oil filter	-	-	-	- -	GU30153000	1	AO229
2	Union	-	-	-	- -	GU30003800	1	-
3	Oil filter	-	-	-	- -	GU05152230	1	AO239
4	Pipe	-	-	-	- -	GU05005730	1	AJ219
5	Thermostatic valve compl.	-	-	-	- -	GU01163500	1	AJ139
6	Spring	-	-	-	- -	GU20164010	1	AJ139
7	Copper gasket	-	-	-	- -	GU01163700	1	AJ139
8	Plug	-	-	-	- -	GU01163600	1	AJ139
9	Piston	-	-	-	- -	GU30150900	1	AJ129
10	Spring	-	-	-	- -	GU94321077	1	AJ129
11	Washer 6,15x11x0,8	-	-	-	- -	GU95008206	2	AJ129
12	Washer	-	-	-	- -	GU30158900	1	AJ129
13	Washer 18,25x24x1	-	-	-	- -	GU18144350	1	AJ129
14	Plug	-	-	-	- -	GU31159050	1	AJ129
15	O-ring 15,08x2,62viton	-	-	-	- -	GU90706151	1	-
16	Hex socket screw M6x16	-	-	-	- -	GU98682316	2	-

BREVA V IE 1100 2005-2007	GU077	02	TAB N.	48
CLUTCH				

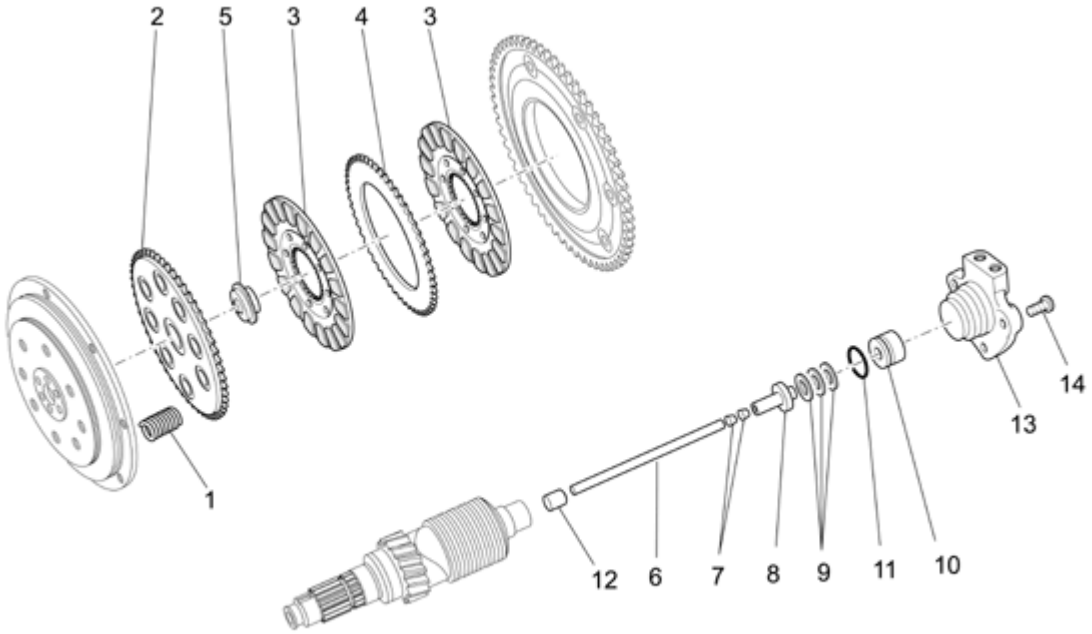

Pos.	Description	Year	I_M_	Country	Version		Code	Q.ty	P.Cod.
1	Clutch spring	-	-	-	1A	-	GU04084100	10	AF229
	Clutch spring	-	-	-	2A-RS	-	GU13084100	5	AF229
	Clutch spring	-	-	-	2A	-	GU04084100	5	AF229
2	Disc	-	-	-	-	-	GU30082900	1	AF239
3	Clutch plate complete	-	-	-	-	-	GU05084430	2	AF209
4	Intermediate plate	-	-	-	-	-	GU12082300	1	AF219
5	Cup	-	-	-	-	-	GU04082800	1	AF329
6	Rod	-	-	-	-	-	GU05085730	1	AF269
7	Bush	-	-	-	-	-	GU14085900	2	-
8	Inner body	-	-	-	-	-	GU14086000	1	-
9	Thrust bearing	-	-	-	-	-	GU12087001	1	AI169
10	Clutch control cylinder	-	-	-	-	-	GU04086100	1	-
11	O-ring 17,13x2,62	-	-	-	-	-	GU90706170	1	-
12	Bush	-	-	-	-	-	GU05217630	1	-
13	Clutch command cylinder	-	-	-	-	-	GU05086330	1	BC139
14	Screw w/ flange M6x16*	-	-	-	-	-	AP8152278	3	-

BREVA V IE 1100 2005-2007	GU077	02	TAB N.	49
TRANSMISSION CAGE				

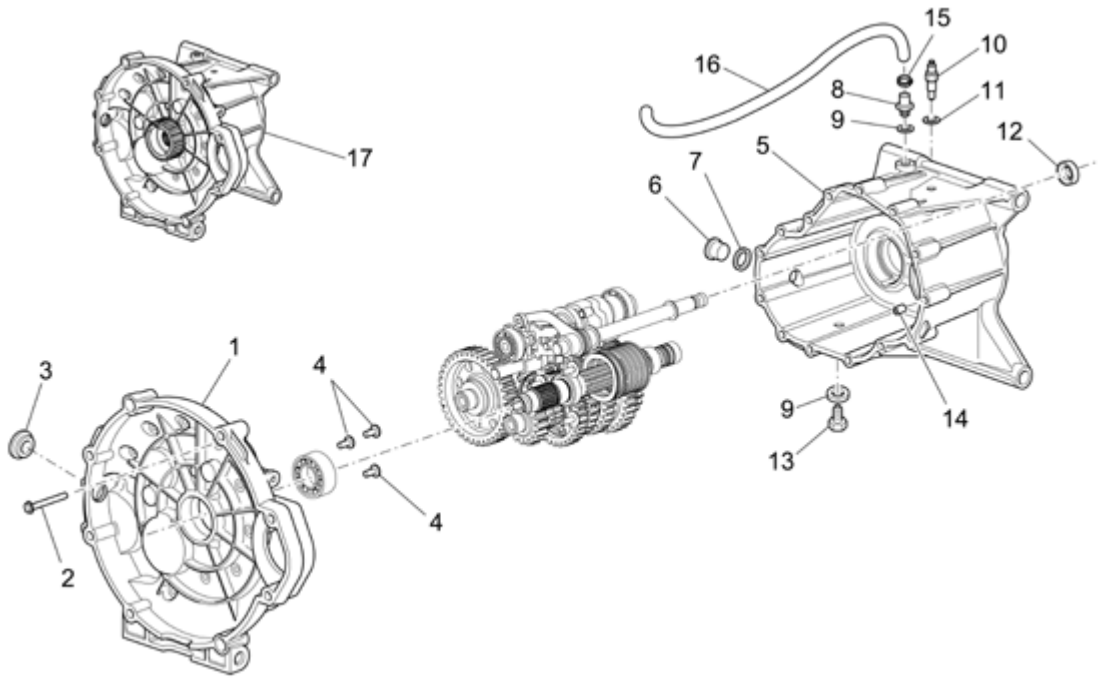

Pos.	Description	Year	I_M_	Country	Version	Code	Q.ty	P.Cod.
1	Clutch drum	-	-	-	- -	GU05200531	1	AH049
2	Screw w/ flange M6x55	-	-	-	- -	GU97202355	14	-
3	Plug	-	-	-	- -	GU93180220	1	-
4	Hex socket screw M6X16	-	-	-	- -	GU98370616	3	-
5	Transmission cage	-	-	-	- -	GU05200231	1	AH299
6	Oil plug M18x1,5	-	-	-	- -	GU95980319	1	AH119
7	Washer 18,25x24x1	-	-	-	- -	GU18144350	1	-
8	Breather plug	-	-	-	- -	GU05204930	1	AJ329
9	Gasket 10x18x1,5	-	-	-	- -	GU01528930	2	-
10	Sensor	-	-	-	- -	GU19207220	1	AN029
11	Gasket 8,25x15x1	-	-	-	- -	GU12154200	1	-
12	Gasket ring 14x24x7	-	-	-	- -	GU90401424	1	AO169
13	Oil unload plug M10X1	-	-	-	- -	GU31003766	1	AH109
14	Bush 6,6x9x13	-	-	-	- -	GU19002020	2	-
15	Hose clamp D10,1*	-	-	-	- -	AP8101595	1	-
16	Fuel pipe 5,5x10	-	-	-	- -	AP8120952	1	-
17	Gear box assy	-	-	-	- -	GU05991530	1	AG099

BREVA V IE 1100 2005-2007	GU077	02	TAB N.	50
GEAR BOX SELECTOR				

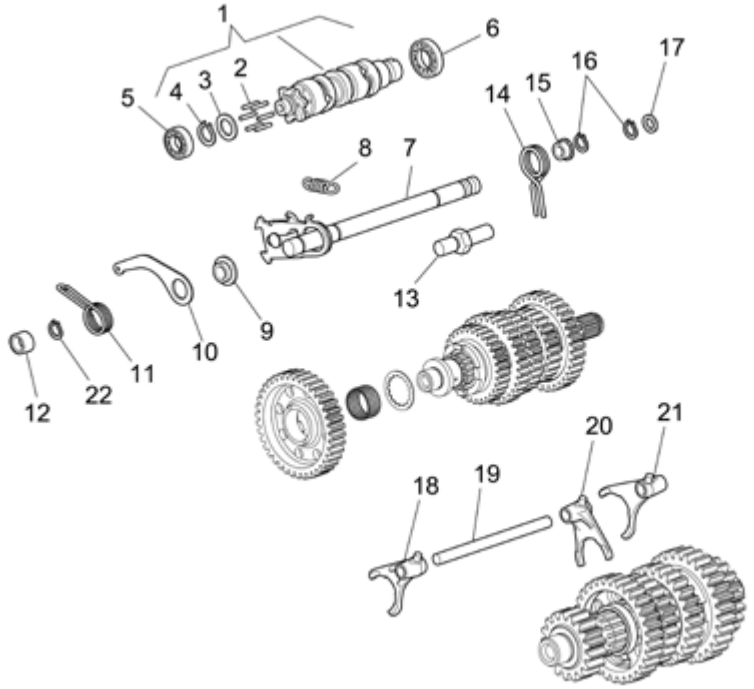

Pos.	Description	Year	I_M_	Country	Version	Code	Q.ty	P.Cod.
1	Shift cam cpl.	-	-	-	- -	GU05234431	1	AG039
2	Pin	-	-	-	- -	GU05234631	6	-
3	Spacer	-	-	-	- -	GU05235531	1	-
4	Circlip	-	-	-	- -	GU90271022	1	-
5	Ball bearing 17x35x10	-	-	-	- -	GU92201117	1	AI139
6	Ball bearing 25x42x9	-	-	-	- -	GU92201025	1	AI139
7	Preselection complete	-	-	-	- -	GU05236231	1	AG119
8	Spring	-	-	-	- -	GU05238231	1	AG139
9	Bush	-	-	-	- -	GU05238431	1	-
10	Lever Index	-	-	-	- -	GU05234731	1	AG129
11	Spring	-	-	-	- -	GU05234130	1	AG139
12	Spacer	-	-	-	- -	GU05234230	1	-
13	Fixing pin	-	-	-	- -	GU05234931	1	-
14	Spring	-	-	-	- -	GU05238331	1	AG109
15	Spacer	-	-	-	- -	GU05238131	1	-
16	Circlip	-	-	-	- -	GU90271014	2	-
17	Fifth wheel	-	-	-	- -	GU05239330	1	-
18	Fork 1a-3a	-	-	-	- -	GU05230531	1	AG059
19	Fork shaft	-	-	-	- -	GU05232431	1	AG069
20	Fork 5a-6a	-	-	-	- -	GU05232631	1	AG059
21	Fork 2a-4a	-	-	-	- -	GU05230831	1	AG059
22	Circlip	-	-	-	- -	GU90353014	1	-

BREVA V IE 1100 2005-2007	GU077	02	TAB N.	51
PRIMARY GEAR SHAFT				

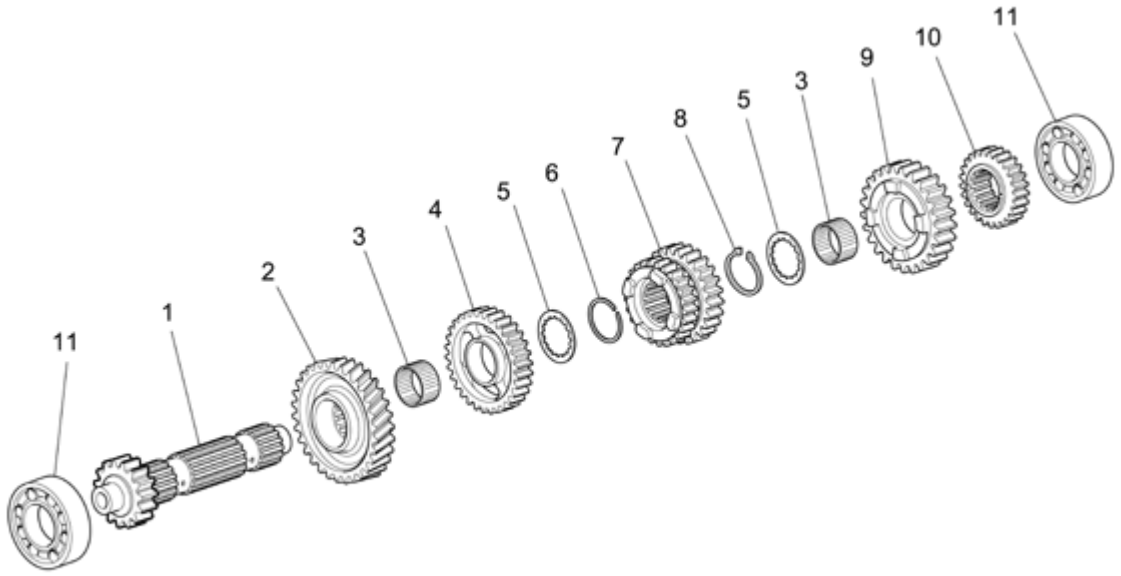

Pos.	Description	Year	I_M_	Country	Version		Code	Q.ty	P.Cod.
1	Primary gear shaft Z=17	-	-	-	-	-	GU05210631	1	AG00X
2	Drive gears Z=35	-	-	-	-	-	GU05215631	1	AG019
3	Roller cage 26x30x15,6	-	-	-	-	-	GU92252029	2	AI119
4	Gear 5a Z=31	-	-	-	-	-	GU05212031	1	AG045
5	Clearance washer	-	-	-	-	-	GU05214630	2	-
6	Snap ring 30x1,2SW	-	-	-	-	-	GU90271230	1	-
7	Gear 3a-4a Z=23-26	-	-	-	-	-	GU05211431	1	AG043
8	Snap ring 30x27,9	-	-	-	-	-	GU90271030	1	-
9	Gear 6a Z=29	-	-	-	-	-	GU05212631	1	AG046
10	Gear 2a Z=20	-	-	-	-	-	GU05211331	1	AG042
11	Ball bearing 20x52x15	-	-	-	-	-	GU92201822	2	AI059

BREVA V IE 1100 2005-2007	GU077	02	TAB N.	52
DRIVEN SHAFT				

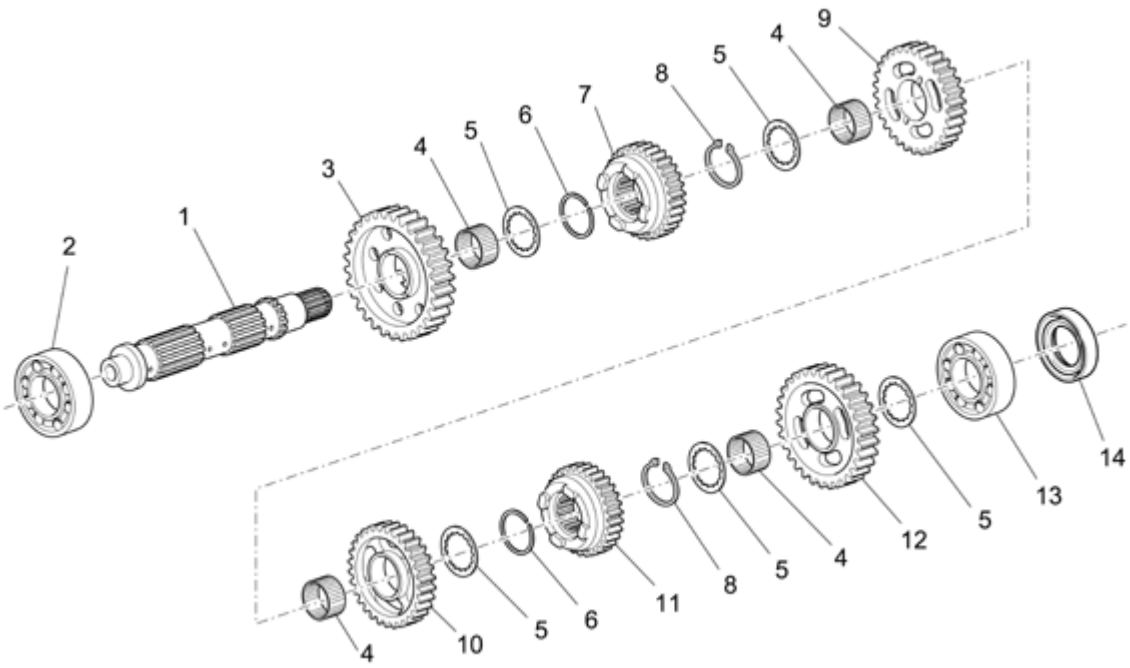

Pos.	Description	Year	I_M_	Country	Version	Code	Q.ty	P.Cod.
1	Driven shaft	-	-	-	- -	GU05213631	1	AG00Y
2	Ball bearing 20x52x15	-	-	-	- -	GU92201822	1	AI069
3	Gear 1a Z=38	-	-	-	- -	GU05214231	1	AG041
4	Roller cage 26x30x15,6	-	-	-	- -	GU92252029	4	AI119
5	Clearance washer	-	-	-	- -	GU05214630	5	-
6	Snap ring 30x1,2SW	-	-	-	- -	GU90271230	2	-
7	Gear 5a Z=30	-	-	-	- -	GU05214031	1	AG045
8	Snap ring 30x27,9	-	-	-	- -	GU90271030	2	-
9	Gear 3a Z=31	-	-	-	- -	GU05214731	1	AG043
10	Gear 4a Z=29	-	-	-	- -	GU05215031	1	AG044
11	Gear 6a Z=25	-	-	-	- -	GU05220531	1	AG046
12	Gear 2a Z=34	-	-	-	- -	GU05214431	1	AG042
13	Ball bearing 25x52x15	-	-	-	- -	GU92201226	1	AI069
14	Gasket ring 25X40X7	-	-	-	- -	GU90412541	1	AO169

BREVA V IE 1100 2005-2007	GU077	02	TAB N.	53
CLUTCH SHAFT				

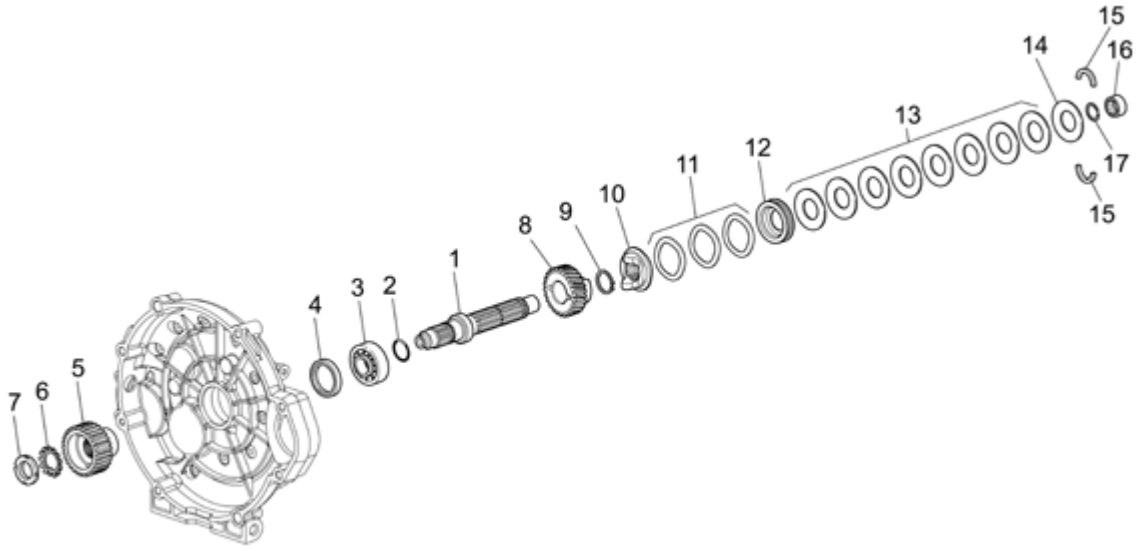

Pos.	Description	Year	I_M_	Country	Version	Code	Q.ty	P.Cod.
1	Clutch shaft	-	-	-	- -	GU05210731	1	AG259
2	O-ring 20,24X2,62	-	-	-	- -	GU90706203	1	AO199
3	Ball bearing 25x52x15	-	-	-	- -	GU92201226	1	AI209
4	Gasket ring 35x47x7	-	-	-	- -	GU90403549	1	AO199
5	Clutch gear	-	-	-	- -	GU05081830	1	AG299
6	Washer 22x20x3,9	-	-	-	- -	GU95028022	1	-
7	Ring nut	-	-	-	- -	GU93601022	1	-
8	Idle gear Z=26	-	-	-	- -	GU05211131	1	AG309
9	Snap ring 25x2	-	-	-	- -	GU90271125	1	-
10	Hose	-	-	-	- -	GU05211231	1	AG359
11	Washer	-	-	-	- -	GU95129340	3	-
12	Disc	-	-	-	- -	GU05211030	1	AG339
13	Belleville spring	-	-	-	- -	GU05211530	8	AG399
14	Disc	-	-	-	- -	GU05211630	1	AG339
15	Half ring	-	-	-	- -	GU12211700	2	AG349
16	Roller bearing 20x28x13	-	-	-	- -	GU92232028	1	AI209
17	Snap ring 28x30,1	-	-	-	- -	GU90272028	1	-

BREVA V IE 1100 2005-2007	GU077	02	TAB N.	54
CURRENT GENERATOR				

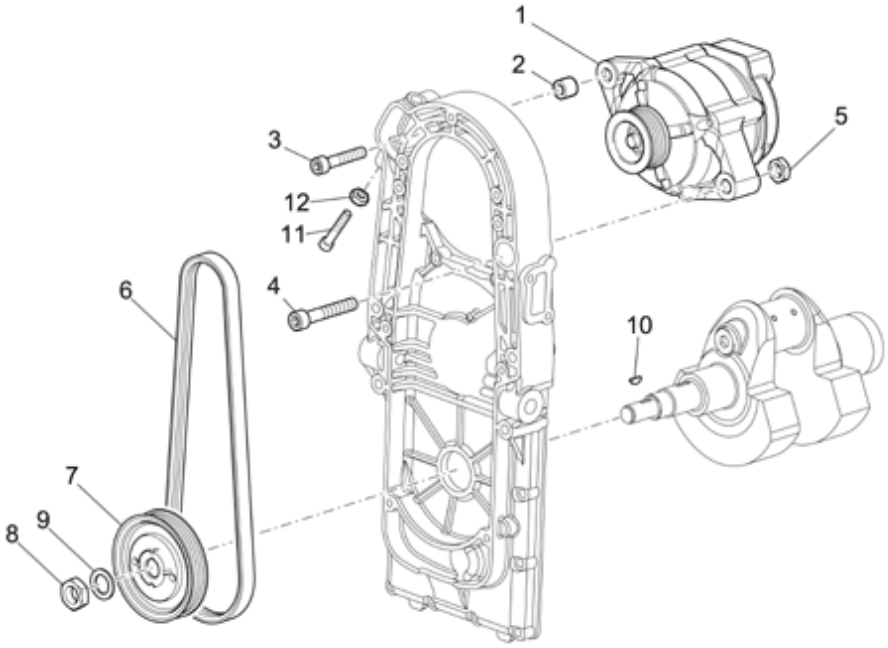

Pos.	Description	Year	I_M_	Country	Version	Code	Q.ty	P.Cod.
1	Generator	-	-	-	- -	GU05712431	1	AM129
2	Spacer 8,5x17x13	-	-	-	- -	GU91180823	1	-
3	Hex socket screw M8X45	-	-	-	- -	GU98620445	1	-
4	Hex socket screw M10x60	-	-	-	- -	GU98620560	1	-
5	Nut M10X1,5	-	-	-	- -	GU92660012	1	-
6	Belt	-	-	-	- -	GU05702530	1	AM159
7	Generator lever pulley	-	-	-	- -	GU05701430	1	AM149
8	Nut M16	-	-	-	- -	GU92606516	1	-
9	Washer 16,25x24,5x5	-	-	-	- -	GU30714201	1	-
10	Flywheel magneto key	-	-	-	- -	AP4FAN000030	1	AD089
11	Hex socket screw M8x50	-	-	-	- -	GU98230850	1	-
12	Nut M8x1,25	-	-	-	- -	GU92605408	1	-

BREVA V IE 1100 2005-2007	GU077	02	TAB N.	55
STARTER MOTOR				

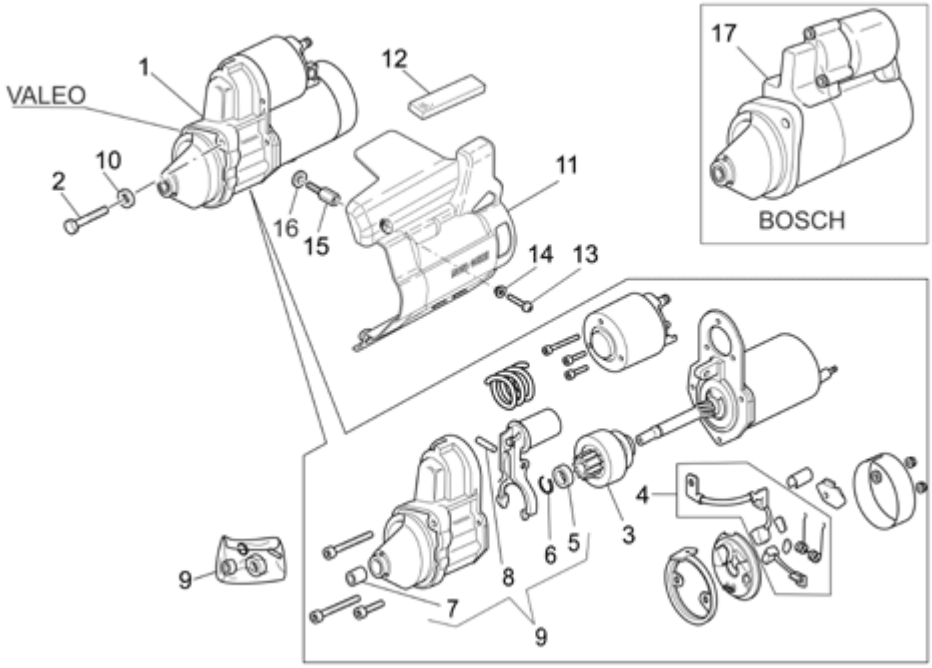

Pos.	Description	Year	I_M_	Country	Version		Code	Q.ty	P.Cod.
1	Starter motor Valeo	-	-	-	-	-	GU30730711	1	AK009
2	Screw M8X75	-	-	-	-	-	GU98082475	2	-
3	Pinion assy	-	-	-	-	-	GU30530510	1	AK049
4	Brush revision set	-	-	-	-	-	GU30530511	1	AK069
5	Stop ring VALEO	-	-	-	-	-	0000000	1	-
6	Safety washer VALEO	-	-	-	-	-	0000000	1	-
7	Bush VALEO	-	-	-	-	-	0000000	1	-
8	Piston pin VALEO	-	-	-	-	-	0000000	1	-
9	Starter motor revision kit	-	-	-	-	-	GU30530512	1	AK109
10	Washer 8,4X15X1,5	-	-	-	-	-	GU95008208	2	-
11	Cover chrime grey	-	-	-	-	-	GU05733330	1	AH099
12	Adhesive sponge	-	-	-	-	-	AP8117200	1	-
13	Hex socket screw M6x12	-	-	-	-	-	GU98350312	2	-
14	Bush	-	-	-	-	-	AP8121032	2	-
15	Stud bolt	-	-	-	-	-	GU03469201	1	-
16	Washer 6,4x12	-	-	-	-	-	GU03013800	1	-
17	Starter motor Bosch	-	-	-	-	-	GU05730730	1	AK009

BREVA V IE 1100 2005-2007	GU077	02	TAB N.	56
THROTTLE BODY				

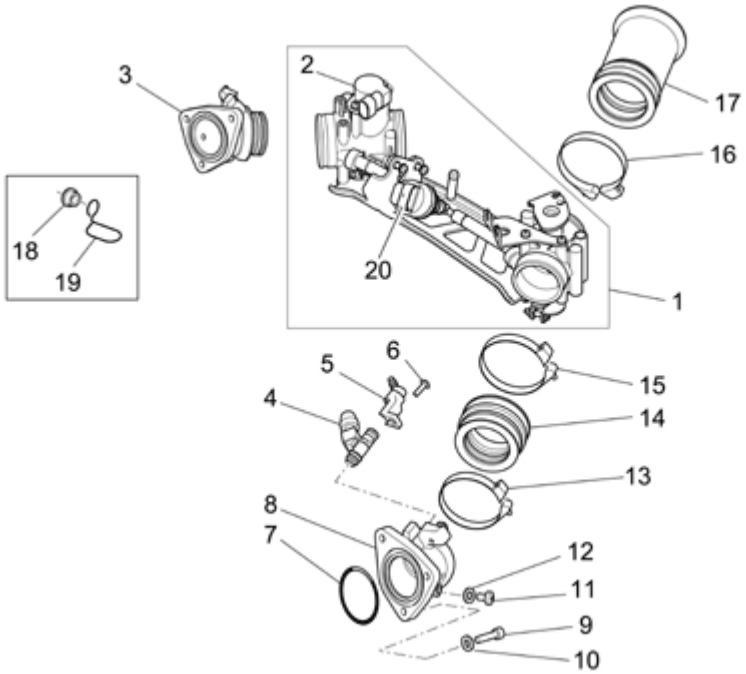

Pos.	Description	Year	I_M_	Country	Version		Code	Q.ty	P.Cod.
1	Throttle assy	-	-	-	-	-	GU05112530	1	EC***
2	Potentiometer	-	-	-	-	-	GU05112830	1	EC059
3	RH manifold	-	-	-	-	-	GU05115030	1	AC00A
4	Injector kit complete	-	-	-	-	-	GU05115730	2	EC129
5	Cap	-	-	-	1A	-	GU32115610	2	-
6	Screw w/ flange M5x16	-	-	-	-	-	AP8152298	2	-
7	O-ring 46,04x3,53	-	-	-	-	-	GU90706461	2	AO04*
8	LH manifold	-	-	-	-	-	GU05115031	1	AC00B
9	Hex socket screw M6x25	-	-	-	-	-	GU98682325	6	AC369
10	Washer 6,15x11x0,8	-	-	-	-	-	GU95008206	6	-
11	Hex socket screw M6x20	-	-	-	-	-	GU98350310	2	-
12	Washer 6,25x10x1,5	-	-	-	-	-	GU95100116	2	-
13	Hose clamp 57x59,5x10	-	-	-	-	-	GU93305057	2	AC029
14	Hose	-	-	-	-	-	GU01114390	2	AC04*
15	Hose clamp 61/65,5	-	-	-	-	-	GU93305061	2	AC029
16	Hose clamp	-	-	-	-	-	GU93305058	2	EB039
17	Intake hose	-	-	-	-	-	GU05114430	2	EB04*
18	Spacer	-	-	-	-	-	GU31576183	1	-
19	Cable-guide	-	-	-	-	-	AP8120428	1	-
20	Min.regulation engine	-	-	-	-	-	GU05135830	1	CE509

BREVA V IE 1100 2005-2007	GU077	02	TAB N.	57
FUEL VAPOUR RECOVER SYSTEM				

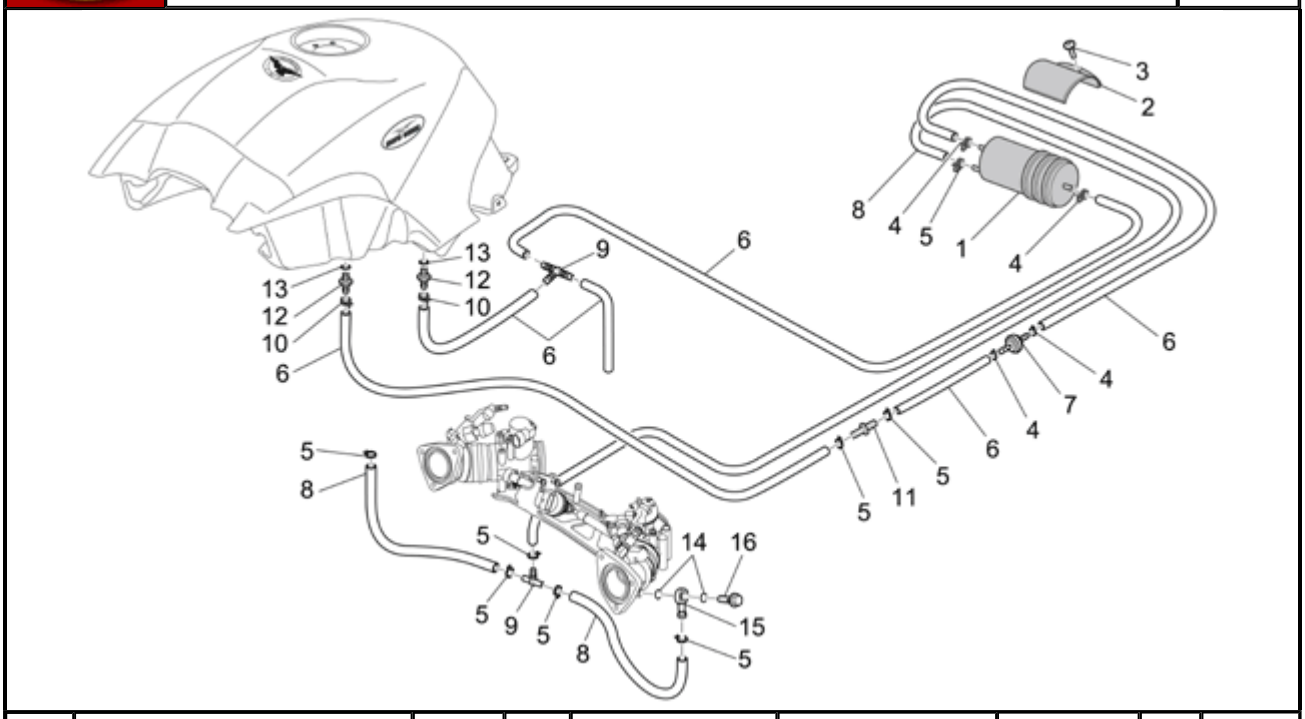

Pos.	Description	Year	I_M_	Country	Version		Code	Q.ty	P.Cod.
1	Carbon filter	-	-	CA-USA	-	-	AP8102678	1	DA449
2	Canister support plate	-	-	CA-USA	-	-	AP8134884	1	-
3	Phillips screw, SWP M5X20	-	-	CA-USA	-	-	AP8152329	1	-
4	Hose clamp D11,3	-	-	CA-USA	-	-	AP8102378	4	-
5	Hose clamp D9,1*	-	-	CA-USA	-	-	AP8102377	8	-
6	Fuel pipe 5,5x10	-	-	CA-USA	-	-	AP8120952	3	DA499
7	Pressure valve	-	-	CA-USA	-	-	AP8104614	1	-
8	Breather pipe 4x8	-	-	CA-USA	-	-	AP8220263	2	DA499
9	3-way union	-	-	CA-USA	-	-	AP8104666	2	-
10	Hose clamp D10,1*	-	-	CA-USA	-	-	AP8101595	2	-
11	2-way union	-	-	CA-USA	-	-	AP8101944	1	-
12	Union	-	-	CA-USA	-	-	GU30103730	2	DA409
13	O-ring 2018	-	-	CA-USA	-	-	AP8120965	2	-
14	O-ring 6x1	-	-	CA-USA	-	-	GU90706009	4	-
15	Union	-	-	CA-USA	-	-	GU95963062	2	-
16	Bored screw M6X1	-	-	CA-USA	-	-	GU95990023	2	-

BREVA V IE 1100 2005-2007	GU077	02	TAB N.	58
SPECIFIC TOOLS I				

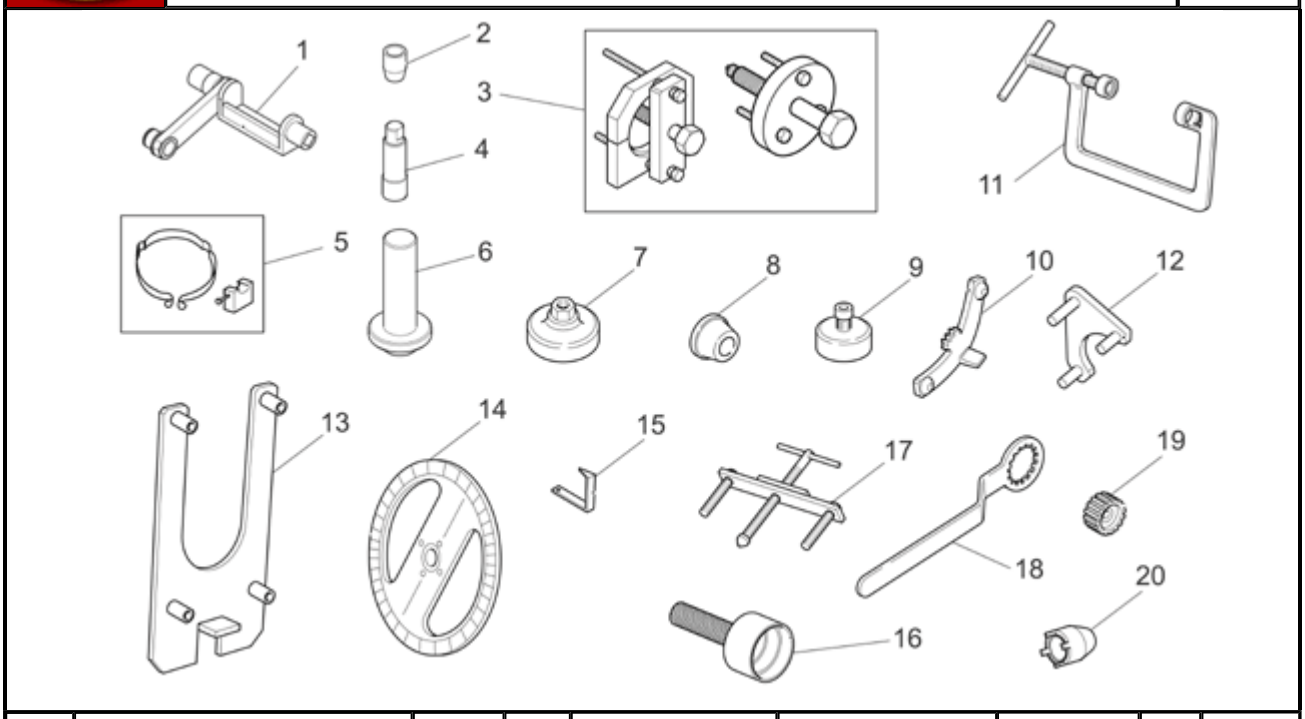

Pos.	Description	Year	I_M_	Country	Version	Code	Q.ty	P.Cod.
1	Belt tensioning tool	-	-	-	- -	GU05948630	1	-
2	Front cover installation cone	-	-	-	- -	GU05911730	1	-
3	Gearbox opening tool	-	-	-	- -	GU05912530	1	-
4	Spark plug key	-	-	-	- -	GU05901930	1	-
5	Piston ring clamp	-	-	-	- -	GU05928030	1	-
6	Timing cover seal drift	-	-	-	- -	GU05927230	1	-
7	Wrench remov.cover sump/filter	-	-	-	- -	GU01929100	1	-
8	Flange flywheel side	-	-	-	- -	GU12912000	1	-
9	Seal ring onto flange fly.side	-	-	-	- -	GU14927100	1	-
10	Lock flywh.starter motor gear	-	-	-	- -	GU12911801	1	-
11	Valve removaland fitting	-	-	-	- -	GU10907200	1	-
12	Clamping the camshaftgearing	-	-	-	- -	GU14927300	1	-
13	Gearbox housing support	-	-	-	- -	GU05902530	1	-
14	Index plate tim.sett./ign.cont	-	-	-	- -	GU19929600	1	-
15	Arrow tim.set.ignition control	-	-	-	- -	GU17947560	1	-
16	Seal ring flange flywheel side	-	-	-	- -	GU19927100	1	-
17	Flange removal flywheel side	-	-	-	- -	GU12913600	1	-
18	Locking clutchinternal body	-	-	-	- -	GU30912810	1	-
19	Tool for clutch assembly	-	-	-	- -	GU30906510	1	-
20	Clutch hub ring nut wrench	-	-	-	- -	GU05912630	1	-

BREVA V IE 1100 2005-2007	GU077	02	TAB N.	59
SPECIFIC TOOLS II				

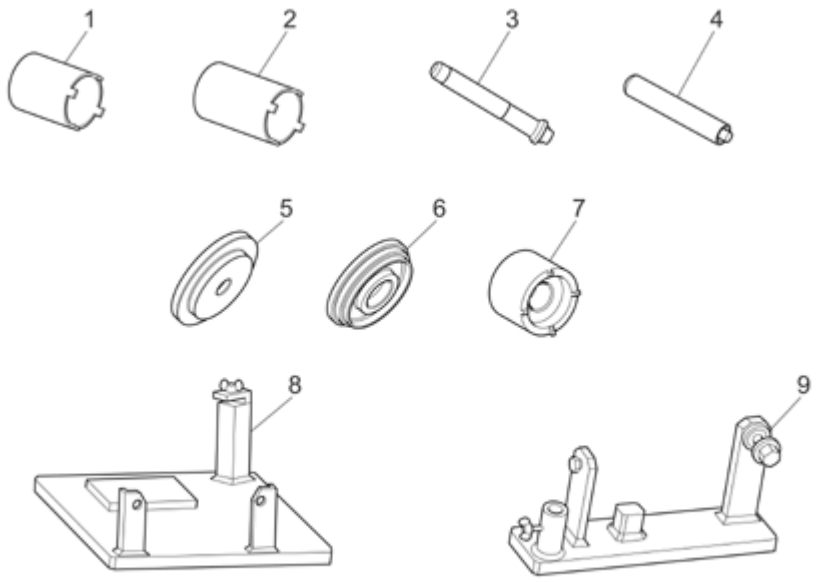

Pos.	Description	Year	I_M_	Country	Version	Code	Q.ty	P.Cod.
1	Clutch hub ring nut wrench	-	-	-	- -	GU05912630	1	-
2	Steering lock tool	-	-	-	- -	AP8140190	1	-
3	Handle for drifts	-	-	-	- -	GU05902732	1	-
4	Ball joint seal drift	-	-	-	- -	GU05902733	1	-
5	Transmis.box oil seal drift 85	-	-	-	- -	GU05902731	1	-
6	Sprocket oil seal drift 45x58	-	-	-	- -	GU05902735	1	-
7	Wrench for sprocket ring nut	-	-	-	- -	GU05902734	1	-
8	Transmission box support	-	-	-	- -	GU05902730	1	-
9	Bevel gears support	-	-	-	- -	GU05902736	1	-

BREVA V IE 1100 2005-2007	GU077	02	TAB N.	60
ABS BRAKE SYSTEM				

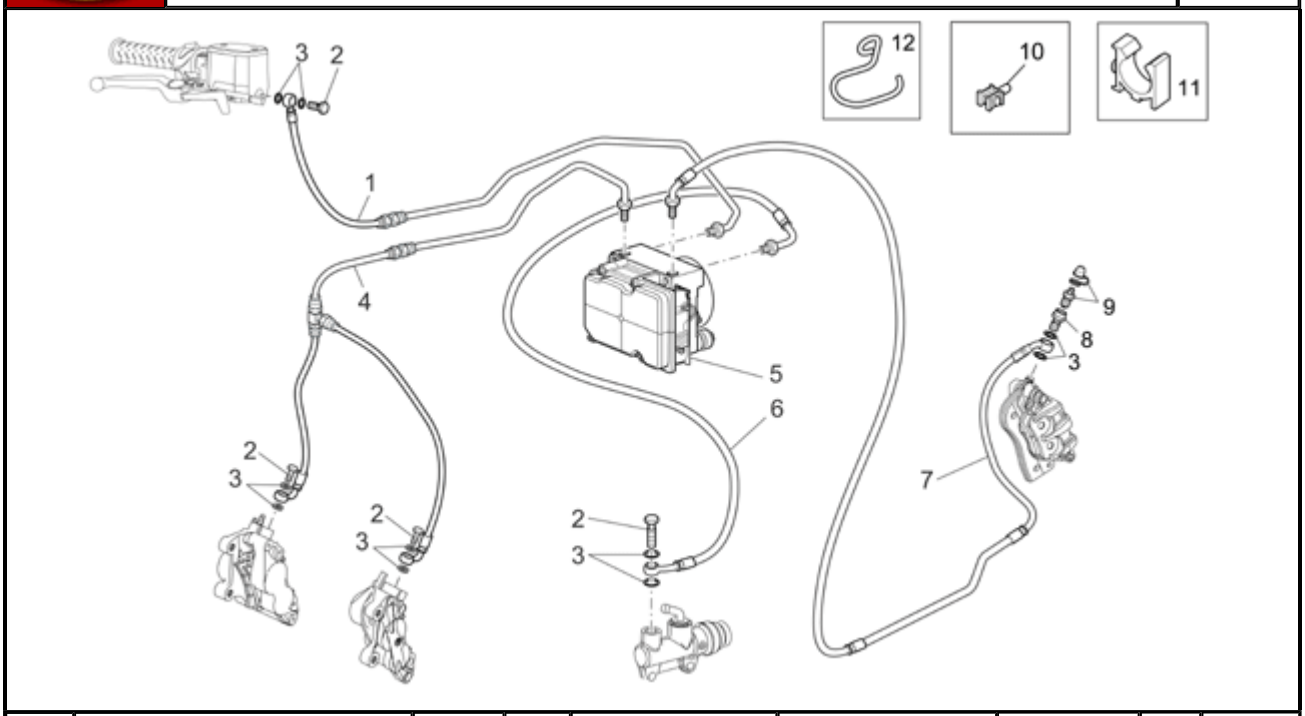

Pos.	Description	Year	I_M_	Country	Version		Code	Q.ty	P.Cod.
1	Front brake hose	-	-	-	abs	-	GU05681030	1	IA05E
2	Oil pipe screw	-	-	-	-	-	AP8133594	4	-
3	Gasket	-	-	-	-	-	GU25656100	10	-
4	Front brake hose	-	-	-	abs	-	GU05680830	1	IA05E
5	ECU/Pump ABS	-	-	-	abs	-	GU05680530	1	IC009
6	Brake hose	-	-	-	abs	-	GU05681130	1	IA05F
7	Rear brake hose	-	-	-	abs	-	GU05680930	1	IA05F
8	Screw	-	-	-	-	-	AP8133597	1	-
9	Bleeder+cap	-	-	-	-	-	AP8213113	1	IA11F
10	Cable-guide hook	-	-	-	-	-	AP8202238	4	-
11	Cable-guide D5	-	-	-	abs	-	GU05436530	4	-
12	Cable-guide D8	-	-	-	abs	-	GU05683130	1	-